YANMAR

PARTS CATALOG

Published 2009/7 (Jul.)

0CR10-G67600

Introduction

1. This parts catalog is a first edition of the 6LPA-STP2, 6LPA-STZP2, 6LPA-STZP3 Diesel engine.

	Parts catalog No.	Date of issue	Remarks
First edition	000Y00R6760	Apr., 2007	

2. This parts catalog does not covers the reduction reverser.
   Please refer to the separate parts catalog, (NO. 000Y00R6600 KMH50A), which covers the reverser.

3. Standard finish color. Yanmar ecole silver metallic

Parts No.	977620-10070	1L (Packed in a can)
Parts No.	977620-40070	4L (Packed in a can)
Parts No.	TOR-90090003	Spray (1 piece)

4. This parts catalog does not contain the technical data needed for maintenance service.

5. The illustrations used in this parts catalog have been simplified for clarity.

6. Specification

Model	6LPA-STP2	6LPA-STZP2	6LPA-STZP3
Type	4-stroke, vertical, water-cooled, diesel engine		
No. of cylinder - Bore (mm) x Stroke (mm)	6 - 94 x 100		
Continuous rating kW/min^{-1}	211/3682		
Combustion system	Direct injection		
Starting system	Electric starting 12V-2.5kW		
Power take-off position	Flywheel side		
Cooling system	Fresh water (Filterd sea water) cooling		
Lubricating system	Forced lubrication		
Reduction reverser	KMH50A		—
Reduction ratio	2.43 / 2.13	1.67	—

7. The contents of this parts catalog are subject to change without notice.

8. Be sure to use only Yanmar genuine part for repairs. If imitation parts are used, it may cause engine defects.

Directions for the Parts Catalog.

1.The parts stipulated in this Parts Catalog are not necessarily standard equipped parts.
2.Parts may change without prior notice.
3.The following is an example of the Parts Catalog format.

0CF10-G21601 29. FUEL INJECTION PUMP(W/BOOST)

(A)=4JH-DT
(B)=4JH-DTZ
(C)=4JH-DTZP
(D)=4JH-DTZA
(E)=4JH-DTZY
(F)=

① REF.	② LEV.	PARTS NO.	DESCRIPTION	Q'TY (A)	(B)	(C)	(D)	(E)	(F)	③ I	⑤ R
1	1	729595-51390	FUEL INJECTION PUMP	1	1	1	1	1			1
1-1	1	729595-51391	FUEL INJECTION PUMP	1	1	1	1	1		N	1
	(A=E00185)	(B=E00200)									
3	2	26022-060162	SCREW M 6X 16	9	9	9	9	9			
3-1 ④	2	26022-060162	SCREW M 6X 16	4	4	4	4	4		K	
	(A=E00156)	(B=E00156)	(C=E00156) (D=E00156)	(E=E00156)							
4	2	129470-51040	CAMSHAFT	1	1	1	1	1			
5	2	122710-51050	BEARING, ROLLER	2	2	2	2	2			
6	2	129470-51060	RETAINER	1	1	1	1	1			

Remarks
(1) BOOST COMPEMSATOR TYPE. OPTIONAL
PART, TO E00155,(4JH-DT, 4JH-DTZ

① Ref. No.

The Ref. No. listed may not be in accordance with the illustration Ref. No.

(Ex.) Illustration No. 1 — List Ref No. 1 (Before change) → 1- 1 (After change)

For interchangeable symbols N, R and K, illustrations for new parts may be abbreviated.

② Lev. (Level)

Level indication
The numbers below indicate the level of relativity towards the main part.
1 ----- Main parts (Assembly parts)
2 ----- Sub component included in " 1 ".
3 ----- Sub component included in " 2 ".
Note) Parts that are not for sale are partially illustrated but not listed.

③ Interchangeability Mark

When a part change takes place, one of the following interchangeability symbols is indicated beside the part.

Symbol	Interchangeability	Contents note
N	Old ← Yes / No → New	New Part is interchangeable for Old Part but Old Part is not interchangeable for New Part.
Q	Old ← No / Yes → New	New Part is not interchangeable for Old Part but Old Part is interchangeable for New Part.
R	Old ← Yes / Yes → New	New/ Old Parts are both interchangeable.
S	Old ← No / No → New	New/ Old Parts are both not interchangeable.
W		Part discontinued.
Z		Part newly added.
F		Not interchangeable by a single part but interchangeable together with related parts.
K		Changes only for used parts quantities.

④ Effective Machine No.

When a part changes, the effective Machine No. will be indicated in the (A)-(F) column.

Product Symbol	Product No.	Product Symbol	Product No.
C	Clutch No. Compressor No.	F	Machine No. (Agricultural Equip.)
D	Drive No.	M	Machine No.
E	Engine No.	Note 1)	Date

Note 1) A date may follow the symbol. (Ex.) 1996.01
Note 2) " XXX " are for parts that could not be predicted or for engine models that could not be identified.
Note 3) (A=E00185) is the E (Engine Serial Number) for the column (A) model (in this case 4JH-DT) after the parts design change.

⑤ Remarks Mark

Figures or alphabets (symbols) are entered in the remarks column.
The comments (remarks) on parts that are indicated at the bottom of the illustration are the same symbols as those stated above.

Selective Combinations Main Bearings

Selective Combinations Main Bearings

The main bearings of the 6LP series employ the selective combinations. The combinations as follows.

The block journal diameter codes are shown on the ladder frame (bearing cap) and the crank journal diameter codes are punched on the crank.

When applying a main bearings, there is the necessity of asking for the main bearings which suits on the table of Table 1. Since the combination is indicated to Table 2, please determine from this.

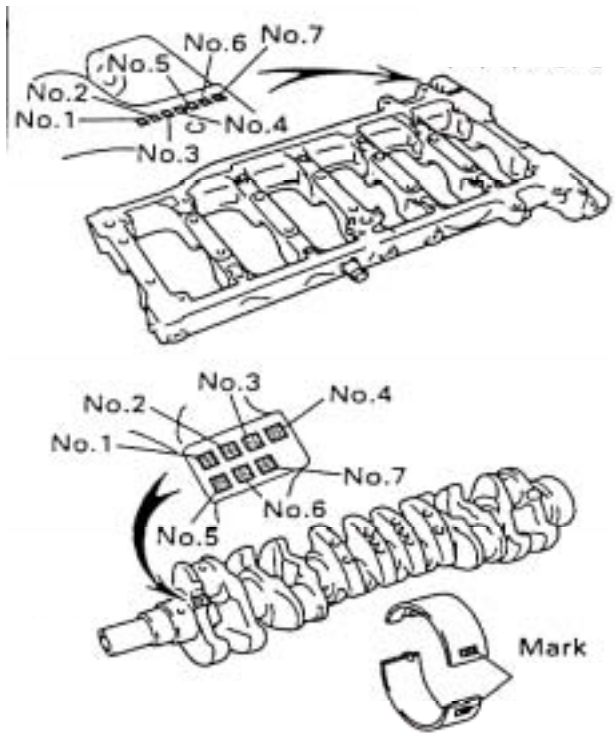

Crankshaft bearing mark position

Table1— Main Bearing Selection Table

Cylinder block main journal Mark	Crankshaft main journal Mark																	
	A	B	C	D	E	H	4	5	6	7	8	9	L	M	R	S	U	X
A	2	2	2	2	2	2	3	3	3	3	3	3	4	4	4	4	4	4
B	2	2	2	2	2	3	3	3	3	3	3	4	4	4	4	4	4	5
C	2	2	2	2	3	3	3	3	3	3	4	4	4	4	4	4	5	5
D	2	2	2	3	3	3	3	3	3	4	4	4	4	4	4	5	5	5
E	2	2	3	3	3	3	3	3	4	4	4	4	4	4	5	5	5	5
H	2	3	3	3	3	3	3	4	4	4	4	4	4	5	5	5	5	5
4	3	3	3	3	3	3	4	4	4	4	4	4	5	5	5	5	5	5
5	3	3	3	3	3	4	4	4	4	4	4	5	5	5	5	5	5	6
6	3	3	3	3	4	4	4	4	4	4	5	5	5	5	5	5	6	6
7	3	3	3	4	4	4	4	4	4	5	5	5	5	5	5	6	6	6
8	3	3	4	4	4	4	4	4	5	5	5	5	5	5	6	6	6	6
9	3	4	4	4	4	4	4	5	5	5	5	5	5	6	6	6	6	6
L	4	4	4	4	4	4	5	5	5	5	5	5	6	6	6	6	6	6
M	4	4	4	4	4	5	5	5	5	5	5	6	6	6	6	6	6	7
R	4	4	4	4	5	5	5	5	5	5	6	6	6	6	6	6	7	7
S	4	4	4	5	5	5	5	5	5	6	6	6	6	6	6	7	7	7
U	4	4	5	5	5	5	5	5	6	6	6	6	6	6	7	7	7	7
X	4	5	5	5	5	5	5	6	6	6	6	6	6	7	7	7	7	7

Table2— Main Bearing Parts Codes

YANMAR P/N	PART NAME	Mark	NOTE
119770-00961	BEARING SET,CRANKSHAFT	2	T=1.982～1.985
119770-00971	BEARING SET,CRANKSHAFT	3	T=1.985～1.988
119770-00981	BEARING SET,CRANKSHAFT	4	T=1.988～1.991
119770-00991	BEARING SET,CRANKSHAFT	5	T=1.991～1.994
119770-01001	BEARING SET,CRANKSHAFT	6	T=1.994～1.997
119770-01170	BEARING SET,CRANKSHAFT	7	T=1.997～2.000

CONTENTS

MODEL : 6LPA-STP2/STZP2,3
PC NO : 0CR10-G67600

Fig.No. GROUP NAME

6LPA-STP2/STZP2,3

1. CYLINDER BLOCK
2. GEAR HOUSING
3. FLYWHEEL HOUSING
4. MOUNTING FOOT
5. LUB.OIL SUMP
6. LABEL
7. BREATHER
8. TURBOCHARGER
9. EXHAUST BEND
10. AIR COOLER
11. AIR DUCT
12. BOOST CONTROL
13. EXHAUST MANIFOLD
14. SUCTION MANIFOLD
15. CYLINDER HEAD
16. ENGINE LIFTER
17. CAMSHAFT
18. CRANKSHAFT
19. DAMPER
20. PISTON & CONNECTING ROD
21. LUB.OIL COOLER 1
22. LUB.OIL COOLER 2
23. LUB.OIL COOLER COVER
24. LUB.OIL PIPE
25. LUB.OIL PIPE(TURBOCHARGER)
26. OIL SUCTION/DRAIN PUMP
27. COOLING SEA WATER PUMP
28. COOLING FRESH WATER PUMP
29. THERMOSTAT

Fig.No. GROUP NAME

30. COOLING FRESH WATER COOLER
31. C.S.W.PIPE(6LPA-STP2)
32. C.S.W.PIPE(6LPA-STZP2/3)
33. COOLING FRESH WATER PIPE
34. C.F.W.WATER PIPE(TURBOCHARGER)
35. BILGE PUMP(STD,OPTIONAL)
36. BILGE PUMP(DX,OPTIONAL)
37. FUEL INJECTION PUMP
38. FUEL INJECTION VALVE
39. FUEL INJECTION PIPE
40. FUEL PIPE
41. FUEL STRAINER
42. FUEL COOLER
43. GLOW PLUG
44. CABLE BRACKET
45. POWER STEERING PUMP
46. POWER STEERING COOLER & TANK
47. ATF PIPE
48. CLUTCH & DRIVE ATTACHMENT
49. STARTING MOTOR
50. GENERATOR
51. BELT COVER
52. INSTRUMENT PANEL(B-TYPE,OPTIONAL)
53. INSTRUMENT PANEL(C-TYPE,OPTIONAL)
54. INSTRUMENT PANEL(D-TYPE,OPTIONAL)
55. WIRE HARNESS & SENSOR
56. SENSOR MOUNT
57. TOOL(OPTIONAL)
58. SPARE PART(OPTINAL)
59. EXHAUST BEND(ZT350 SPEC)

CONTENTS

MODEL : 6LPA-STP2/STZP2,3
PC NO : 0CR10-G67600

Fig.No.	GROUP NAME
60.	C.S.W.PIPE(ZT350 SPEC)
61.	COUPLING(ZT350 SPEC)

Fig.No.	GROUP NAME

Fig.1. CYLINDER BLOCK

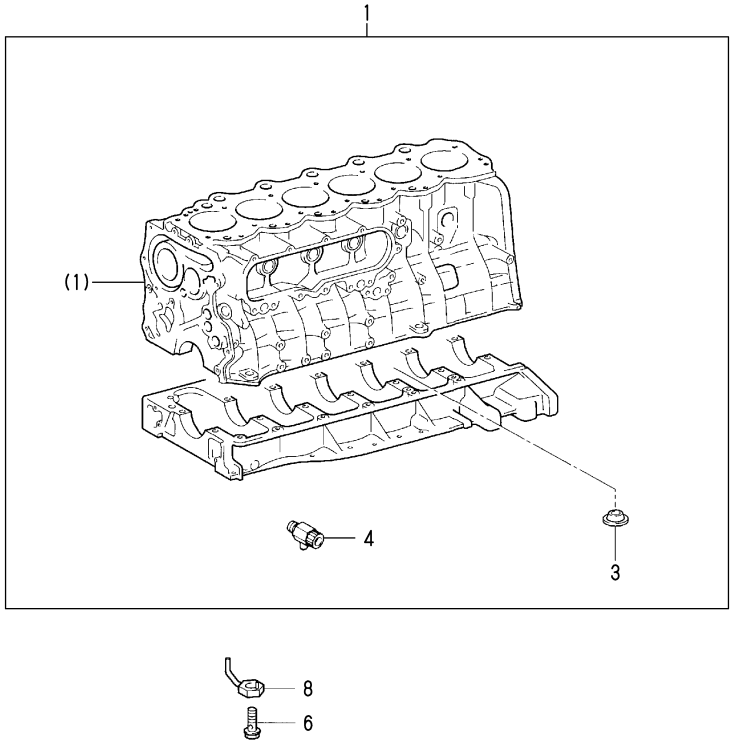

1. CYLINDER BLOCK

(A)=6LPA-STP2 (D)=
(B)=6LPA-STZP2 (E)=
(C)=6LPA-STZP3 (F)=

REF.	LEV.	PARTS NO.	DESCRIPTION	Q'TY (A)	(B)	(C)	(D)	(E)	(F)	I	R
1	1	119771-10040	BLOCK ASSY,CYLINDER	1	1	1					
3	2	119770-00110	GASKET,CYL.BLOCK	1	1	1					
4	2	119770-90990	COCK ASSY,DRAIN	1	1	1					
6	1	119771-00320	VALVE,SUB-ASSY,OIL	6	6	6					
8	1	119771-00330	NOZZLE SUB-ASSY,OIL	6	6	6					

N:Old $\xleftrightarrow[\text{No}]{\text{Yes}}$ New, Q:Old $\xleftrightarrow[\text{Yes}]{\text{No}}$ New, R:Old $\xleftrightarrow[\text{Yes}]{\text{Yes}}$ New, S:Old $\xleftrightarrow[\text{No}]{\text{No}}$ New, W:Add, Z:Discontinued, F:Interchangeable by set, K:Q'ty Change

(C)Copy Rights YANMAR CO.,LTD.

Fig.2. GEAR HOUSING

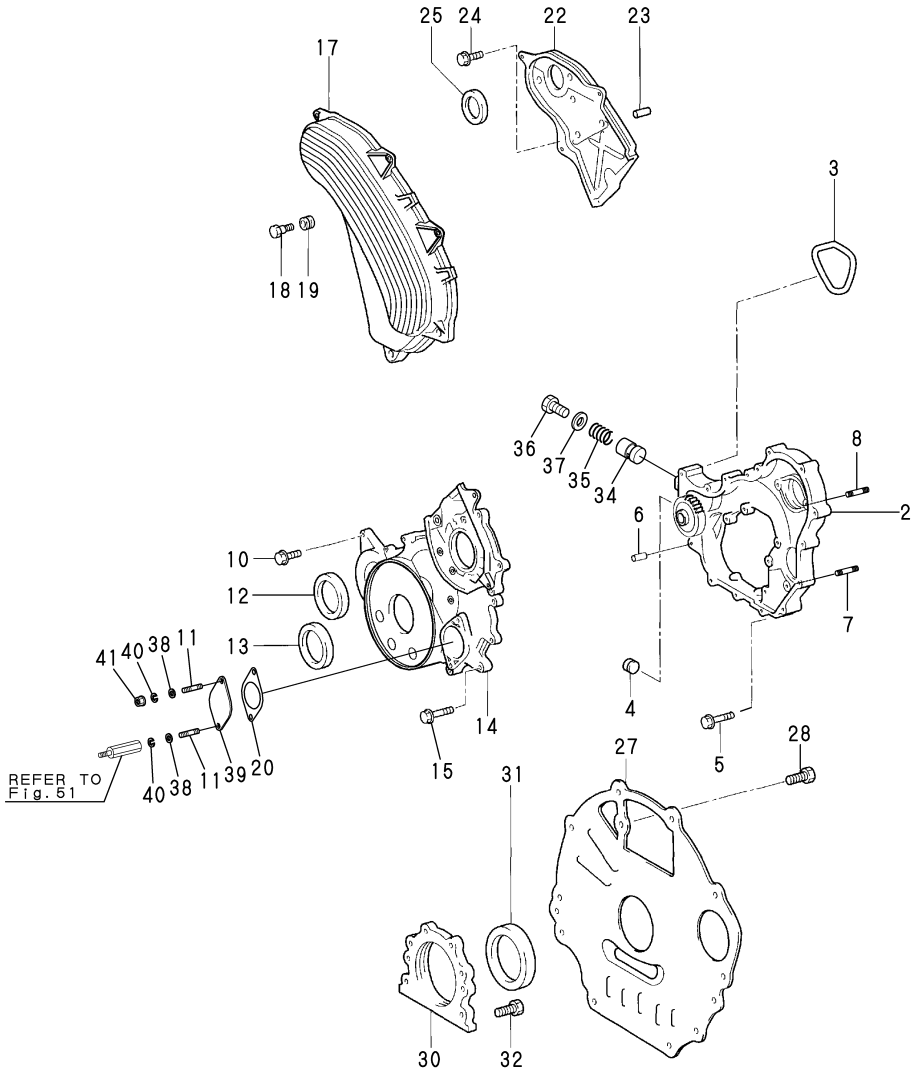

2. GEAR HOUSING

(A)=6LPA-STP2 (D)=
(B)=6LPA-STZP2 (E)=
(C)=6LPA-STZP3 (F)=

REF.	LEV.	PARTS NO.	DESCRIPTION	Q'TY (A)	(B)	(C)	(D)	(E)	(F)	I	R
2	2	119771-00060	CASE SUB-ASSY,TIMING	1	1	1					
3	2	119770-00160	GASKET,OIL PUMP	1	1	1					
4	2	119771-90110	PLUG,TAPER SCREW	1	1	1					
5	2	119771-90120	BOLT,FLANGE	7	7	7					
6	2	119770-90250	PIN,STRAIGHT	1	1	1					
7	2	119770-01210	BOLT,STUD	2	2	2					
8	2	119770-01220	BOLT,STUD	2	2	2					
10	2	119771-90140	BOLT,FLANGE	6	6	6					
11	2	119770-90270	BOLT,STUD	2	2	2					
12	2	119770-90280	SEAL,TYPE T OIL	1	1	1					
13	2	119770-90290	SEAL,TYPE T OIL	1	1	1					
14	2	119771-00071	COVER,TIMING GEAR	1	1	1					
15	2	119771-90130	BOLT,FLANGE	9	9	9					
17	2	119771-00081	COVER(TIMING VELT	1	1	1					
18	2	119770-90320	BOLT	6	6	6					
19	2	119770-90330	WASHER,SEAL	6	6	6					
20	1	119773-01590	GASKET,COVER	1	1	1					
22	2	119771-00101	RETAINER,CAMSHAFT	1	1	1					
23	2	119770-90020	PIN,RING	2	2	2					
24	2	119771-90120	BOLT,FLANGE	4	4	4					
25	2	119771-90160	SEAL,TYPE T OIL	1	1	1					
27	2	119770-00201	PLATE,RR END	1	1	1					
28	2	119770-90350	BOLT,W/WASHER	1	1	1					
30	2	119770-00030	RETAINER,OIL SEAL	1	1	1					
31	2	119770-90090	SEAL,TYPE T OIL	1	1	1					
32	2	119770-90100	BOLT,FLANGE	6	6	6					
34	2	119770-01240	VALVE,LO-P RELIEF	1	1	1					
35	2	119770-01250	SPRING,OILPUMP RELIE	1	1	1					
36	2	119770-01260	PLUG,LO-P RELIEF.V	1	1	1					
37	2	119771-01270	GASKET,LO-P RELIEF.V	1	1	1					
38	1	22117-100000	WASHER 10	2	2	2					
39	1	119773-01580	COVER,GEAR CASE	1	1	1					
40	1	22217-100000	SPRING WASHER 10	2	2	2					
41	1	26376-100002	U-NUT M10	1	1	1					

N:Old $\frac{\text{Yes}}{\text{No}}$ New, Q:Old $\frac{\text{No}}{\text{Yes}}$ New, R:Old $\frac{\text{Yes}}{\text{Yes}}$ New, S:Old $\frac{\text{No}}{\text{No}}$ New, W:Add, Z:Discontinued, F:Interchangeable by set, K:Q'ty Change

(C)Copy Rights YANMAR CO.,LTD.

Fig.3. FLYWHEEL HOUSING

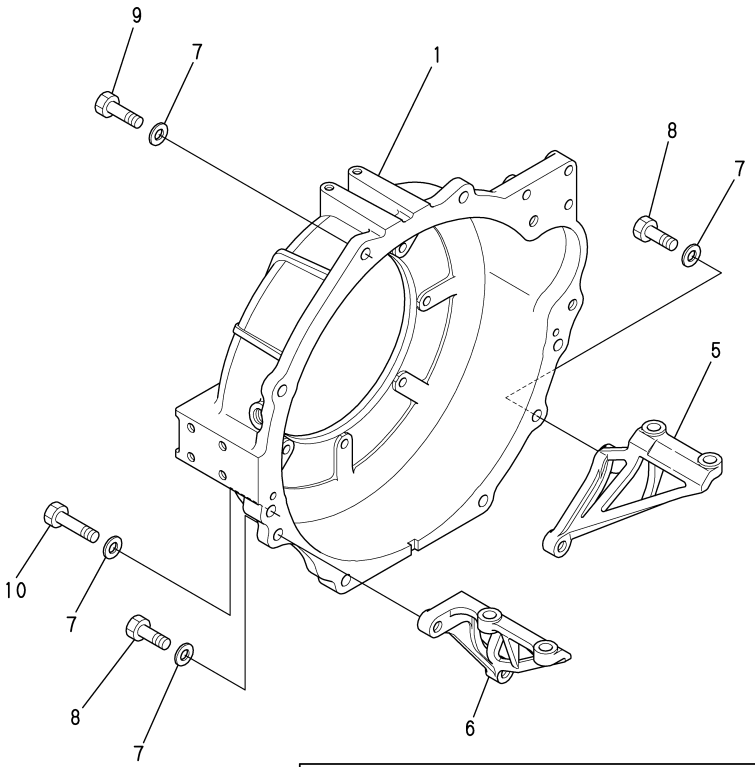

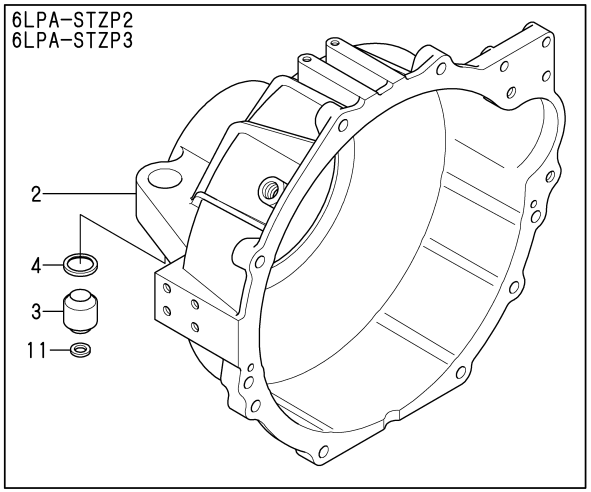

3. FLYWHEEL HOUSING

(A)=6LPA-STP2 (D)=
(B)=6LPA-STZP2 (E)=
(C)=6LPA-STZP3 (F)=

	REF.	LEV.	PARTS NO.	DESCRIPTION	Q'TY (A)	(B)	(C)	(D)	(E)	(F)	I	R
	1	1	119773-01600	HOUSING,FLYWHEEL	1							
	2	1	119779-01610	FLYWHEEL HOUSING		1	1					
I	2-1	1	119779-01611	FLYWHEEL HOUSING		1	1				N	
			(B=*2008.12)	(C=*2008.12)								
	3	1	119778-08310	MOUNTING, FLEXIIBLE		2	2					
	4	1	119778-08350	SPACER		2	2					
	5	1	119775-01650	PLATE,STIFFENER,RH	1							
	6	1	119775-01670	PLATE,STIFFENER,LH	1							
	7	1	22117-120000	WASHER 12	13	13	13					
	8	1	26156-120352	BOLT M12X 35 PLATED	8	8	8					
	9	1	26156-120402	BOLT M12X 40	3	3	3					
	10	1	26156-120502	BOLT M12X50	2	2	2					
	11	1	119779-08350	SPACER,REAR MOUNT		2	2					

N:Old $\xleftrightarrow[\text{No}]{\text{Yes}}$ New, Q:Old $\xleftrightarrow[\text{Yes}]{\text{No}}$ New, R:Old $\xleftrightarrow[\text{Yes}]{\text{Yes}}$ New, S:Old $\xleftrightarrow[\text{No}]{\text{No}}$ New, W:Add, Z:Discontinued, F:Interchangeable by set, K:Q'ty Change

(C)Copy Rights YANMAR CO.,LTD.

Fig.4. MOUNTING FOOT

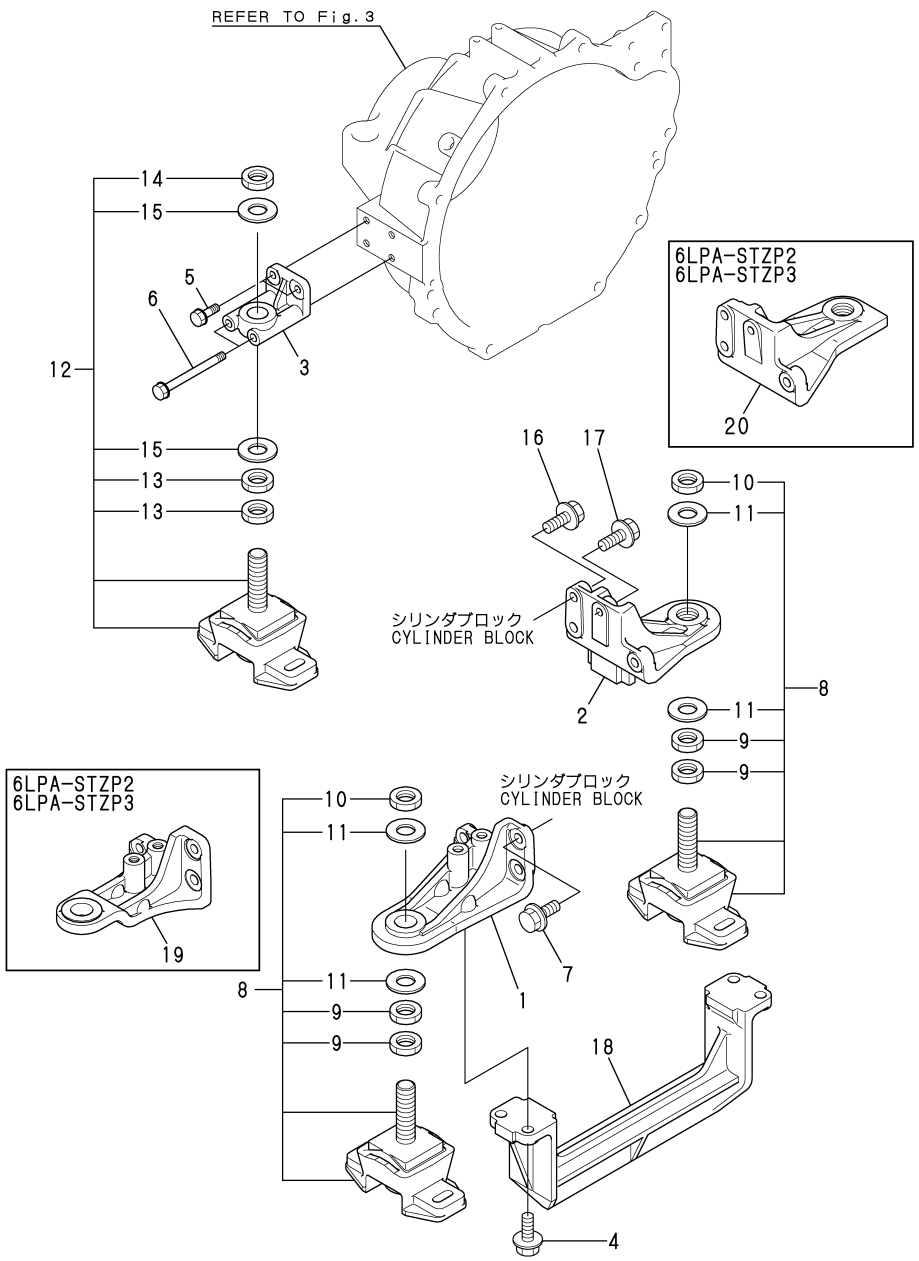

4. MOUNTING FOOT

(A)=6LPA-STP2 (D)=
(B)=6LPA-STZP2 (E)=
(C)=6LPA-STZP3 (F)=

REF.	LEV.	PARTS NO.	DESCRIPTION	Q'TY (A)	(B)	(C)	(D)	(E)	(F)	I	R
1	1	119775-08101	BRACKET,ENGINE,FL	1							
2	1	119775-08111	BRACKET,ENGINE,FR	1							
3	1	119773-08200	BRACKET,ENGINE,R	2							
4	1	119775-08210	BOLT,FOOT SUPPORT	4	4	4					
5	1	26106-100302	BOLT M10X 30 PLATED	4							
6	1	26106-101102	BOLT M10X110 PLATED	4							
7	1	119775-08220	BOLT,MOUNT FOOT	3	3	3					
8	1	119773-08300	MOUNTING,FLEXIBLE	2	2	2					
9	2	119773-08330	JAM NUT(RUBBER	4	4	4					
10	2	119773-08340	NUT(RUBBER	2	2	2					
11	2	119773-08350	WASHER(RUBBER	4	4	4					
12	1	119773-08310	MOUNTING,FLEXIBLE	2							
13	2	119773-08330	JAM NUT(RUBBER	4							
14	2	119773-08340	NUT(RUBBER	2							
15	2	119773-08350	WASHER(RUBBER	4							
16	1	119775-08230	BOLT,MOUNT FOOT	3	3	3					
17	1	26136-100352	BOLT M10X35	1	1	1					
18	1	119778-08502	SUPPORT	1	1	1					
19	1	119779-08101	BRACKET,ENGINE,FL		1	1					
20	1	119779-08111	BRACKET,ENGINE,FR		1	1					

N:Old $\overset{\text{Yes}}{\underset{\text{No}}{\leftrightarrow}}$ New, Q:Old $\overset{\text{No}}{\underset{\text{Yes}}{\leftrightarrow}}$ New, R:Old $\overset{\text{Yes}}{\underset{\text{Yes}}{\leftrightarrow}}$ New, S:Old $\overset{\text{No}}{\underset{\text{No}}{\leftrightarrow}}$ New, W:Add, Z:Discontinued, F:Interchangeable by set, K:Q'ty Change

(C)Copy Rights YANMAR CO.,LTD.

Fig.5. LUB.OIL SUMP

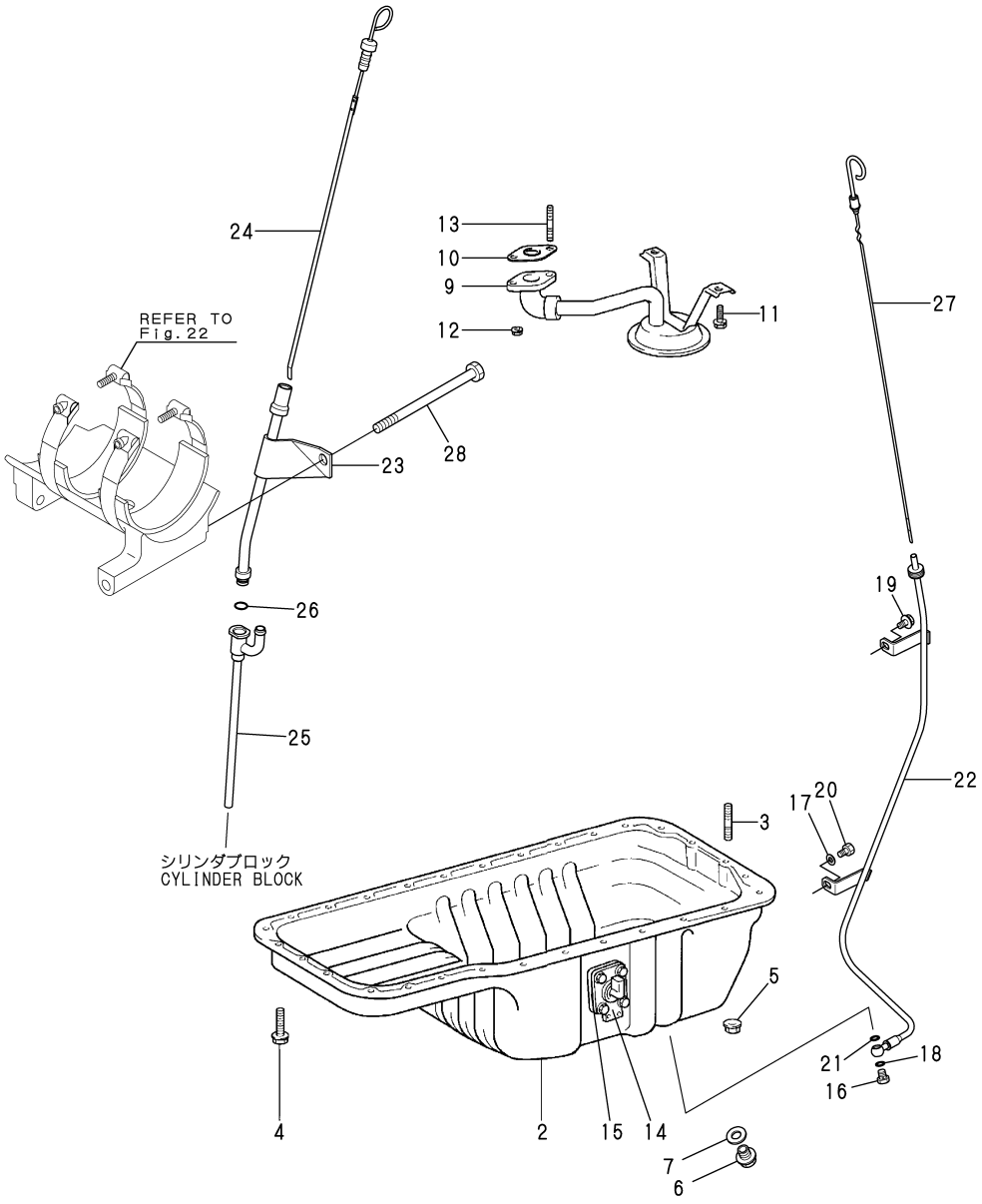

5. LUB.OIL SUMP

(A)=6LPA-STP2 (D)=
(B)=6LPA-STZP2 (E)=
(C)=6LPA-STZP3 (F)=

REF.	LEV.	PARTS NO.	DESCRIPTION	Q'TY (A)	(B)	(C)	(D)	(E)	(F)	I	R
2	2	119770-00230	PUN SUB-ASSY,OIL	1	1	1					
3	2	119770-90370	BOLT,STUD	3	3	3					
4	2	119770-90380	BOLT,W/WASHER	27	27	27					
5	2	119770-90390	NUT	3	3	3					
6	2	119770-90400	PLUG,W/HEAD STRAIGHT	1	1	1					
7	2	119770-90410	GASKET	1	1	1					
9	2	119770-00620	STRAINER SUB-ASSY	1	1	1					
10	2	119770-00630	GASKET,OIL STRAINER	1	1	1					
11	2	119770-90380	BOLT,W/WASHER	2	2	2					
12	2	119770-90390	NUT	2	2	2					
13	2	119770-90611	BOLT,STUD	2	2	2					
14	1	119770-01200	SENSOR, OIL LEVEL	1	1	1					
15	1	119770-91020	GASKET	1	1	1					
16	1	119773-34810	JOINT, PIPE	1	1	1					
17	1	22117-120000	WASHER 12	1	1	1					
18	1	23414-120016	GASKET 12	1	1	1					
19	1	26106-080142	BOLT 8X 14 PLATED	1	1	1					
20	1	26156-120202	BOLT M12X 20 PLATED	1	1	1					
21	1	22190-120006	WASHER,SEAL 12	1	1	1					
22	1	119773-34821	TUBE,DIPSTICK	1	1	1					
23	1	119773-34600	GUIDE, DIPSTICK	1	1	1					
24	1	119773-34621	GAGE, OIL LEVEL	1	1	1					
25	1	119773-34770	TUBE, BREATHER	1	1	1					
26	1	24341-000100	O-RING 1A S-10.0	1	1	1					
27	1	119773-34950	GAUGE,DIPSTICK	1	1	1					
28	1	119773-34400	BOLT 10X145	1	1	1					

N:Old $\overset{\text{Yes}}{\underset{\text{No}}{\leftrightarrows}}$ New, Q:Old $\overset{\text{No}}{\underset{\text{Yes}}{\leftrightarrows}}$ New, R:Old $\overset{\text{Yes}}{\underset{\text{Yes}}{\leftrightarrows}}$ New, S:Old $\overset{\text{No}}{\underset{\text{No}}{\leftrightarrows}}$ New, W:Add, Z:Discontinued, F:Interchangeable by set, K:Q'ty Change

(C)Copy Rights YANMAR CO.,LTD.

Fig.6. LABEL

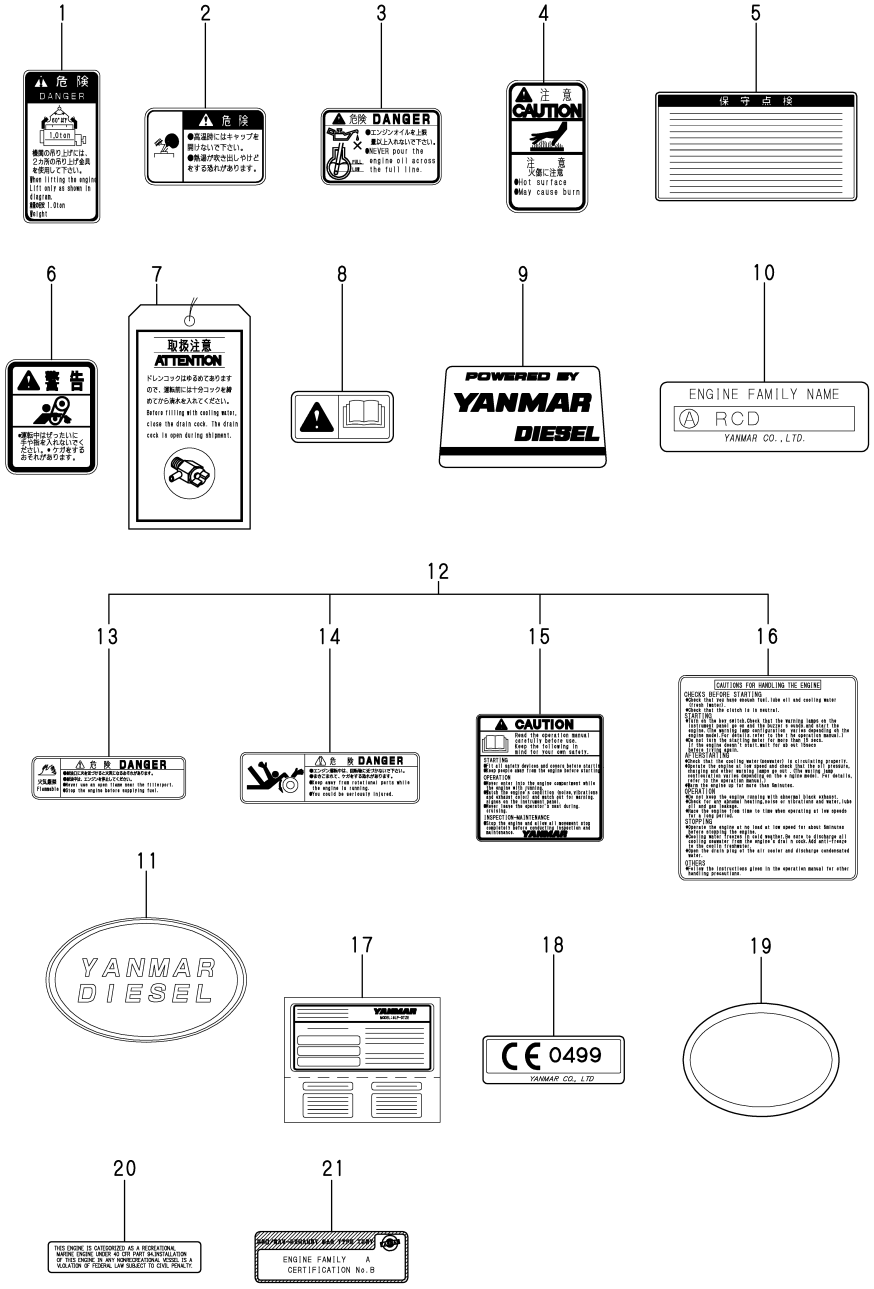

6. LABEL

(A)=6LPA-STP2 (D)=
(B)=6LPA-STZP2 (E)=
(C)=6LPA-STZP3 (F)=

REF.	LEV.	PARTS NO.	DESCRIPTION	Q'TY (A)	(B)	(C)	(D)	(E)	(F)	I	R
1	1	120324-07240	LABEL, LIFTER	1	1	1					
2	1	128296-07260	LABEL,DANGER	1	1	1					
3	1	119773-07280	LABEL,DANGER	1	1	1					
4	1	128296-07300	LABEL,DANGER	1	1	1					
5	1	119773-07350	LABEL	1	1	1					
6	1	128296-07360	LABEL, CAUTION	1	1	1					
7	1	123682-07852	LABEL, CW. TANK	1	1	1					
8	1	196630-12980	LABEL	1	1	1					
9	1	119778-07500	LABEL,YANMER		1	1					
10	1	119775-07420	LABEL,RCD	1	1	1					
11	1	119775-07251	LABEL,YANMAR	1	1	1					
12	1	128296-07190	LABEL,LOOSE PARTS	1	1	1					
13	2	128296-07400	LABEL,DANGER	2	2	2					
14	2	128296-07420	LABEL,DANGER	1	1	1					
15	2	128296-07450	LABEL,DANGER	1	1	1					
16	2	128296-07460	LABEL,DANGER	1	1	1					
17	1	119779-07430	LABEL,REGISTRATION		1	1					
18	1	119172-07540	LABEL,RCD-CE	1	1	1					
19	1	119775-07280	LABEL	1	1	1					
20	1	127672-07100	LABEL,RECREATIONAL	1	1	1					
21	1	119775-07520	LABEL, BSO	1	1	1					

N:Old $\overset{\text{Yes}}{\underset{\text{No}}{\leftrightarrows}}$ New, Q:Old $\overset{\text{No}}{\underset{\text{Yes}}{\leftrightarrows}}$ New, R:Old $\overset{\text{Yes}}{\underset{\text{Yes}}{\leftrightarrows}}$ New, S:Old $\overset{\text{No}}{\underset{\text{No}}{\leftrightarrows}}$ New, W:Add, Z:Discontinued, F:Interchangeable by set, K:Q'ty Change

(C)Copy Rights YANMAR CO.,LTD.

Fig.7. BREATHER

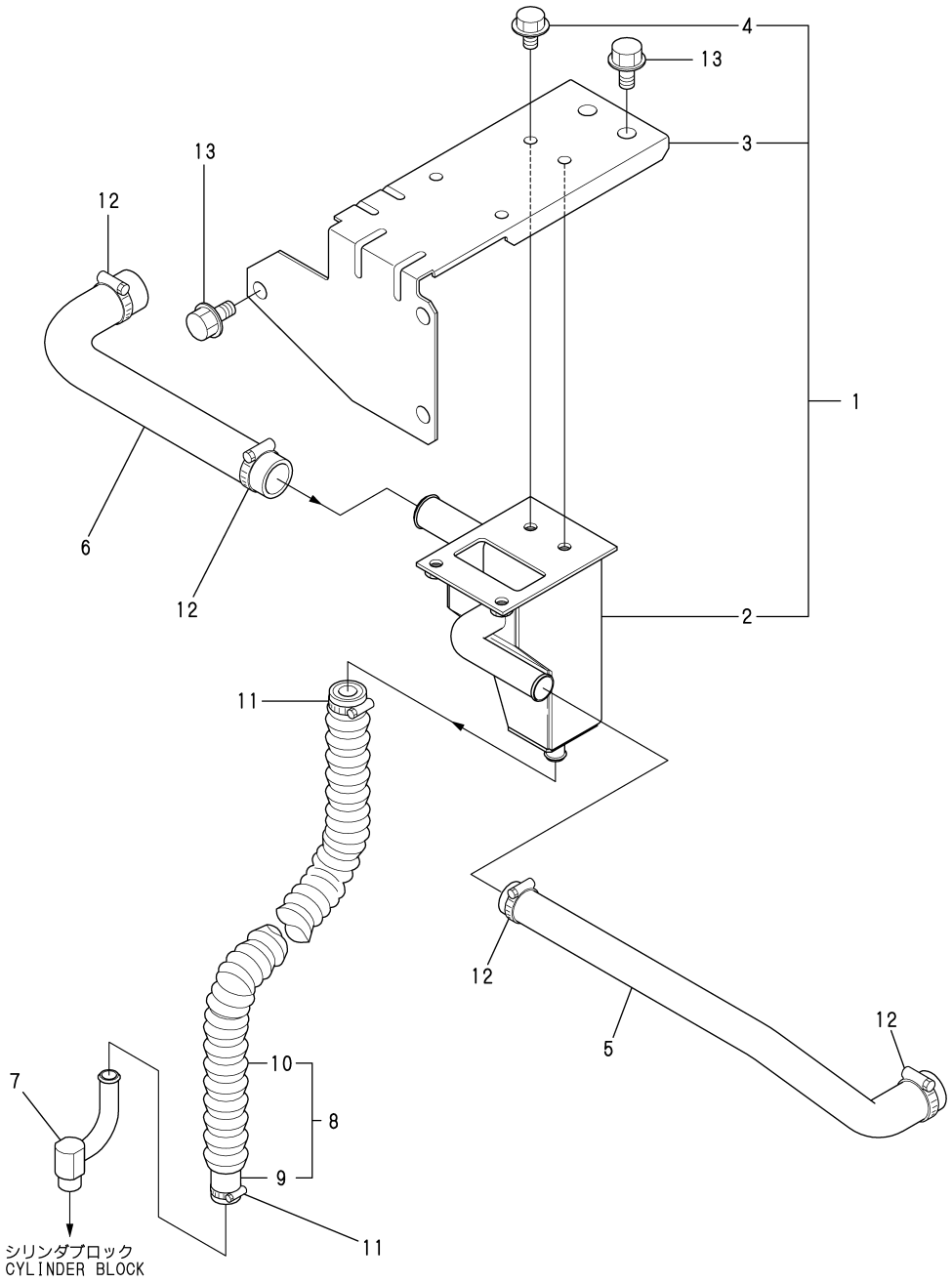

7. BREATHER

(A)=6LPA-STP2 (D)=
(B)=6LPA-STZP2 (E)=
(C)=6LPA-STZP3 (F)=

REF.	LEV.	PARTS NO.	DESCRIPTION	Q'TY (A)	(B)	(C)	(D)	(E)	(F)	I	R
1	1	119773-03011	BREATHER ASSY	1	1	1					
2	2	119773-03021	BREAZER	1	1	1					
3	2	119773-03031	COVER,BREAZER	1	1	1					
4	2	26106-060122	BOLT M 6X 12 PLATED	4	4	4					
5	1	119775-03150	HOSE,BONNET OUT	1	1	1					
6	1	119773-03190	HOSE,BREAZER	1	1	1					
7	1	119773-03200	TUBE,BREAZER	1	1	1					
8	1	119773-03301	HOSE W/TUBE	1	1	1					
9	2	119773-03251	HOSE	1	1	1					
10	2	119773-03271	TUBE	1	1	1					
11	1	119172-48190	CLAMP 19	2	2	2					
12	1	119172-48250	CLAMP 25	4	4	4					
13	1	26106-080142	BOLT 8X 14 PLATED	5	5	5					

N:Old ◄Yes/No► New, Q:Old ◄No/Yes► New, R:Old ◄Yes/Yes► New, S:Old ◄No/No► New, W:Add, Z:Discontinued, F:Interchangeable by set, K:Q'ty Change

(C)Copy Rights YANMAR CO.,LTD.

Fig.8. TURBOCHARGER

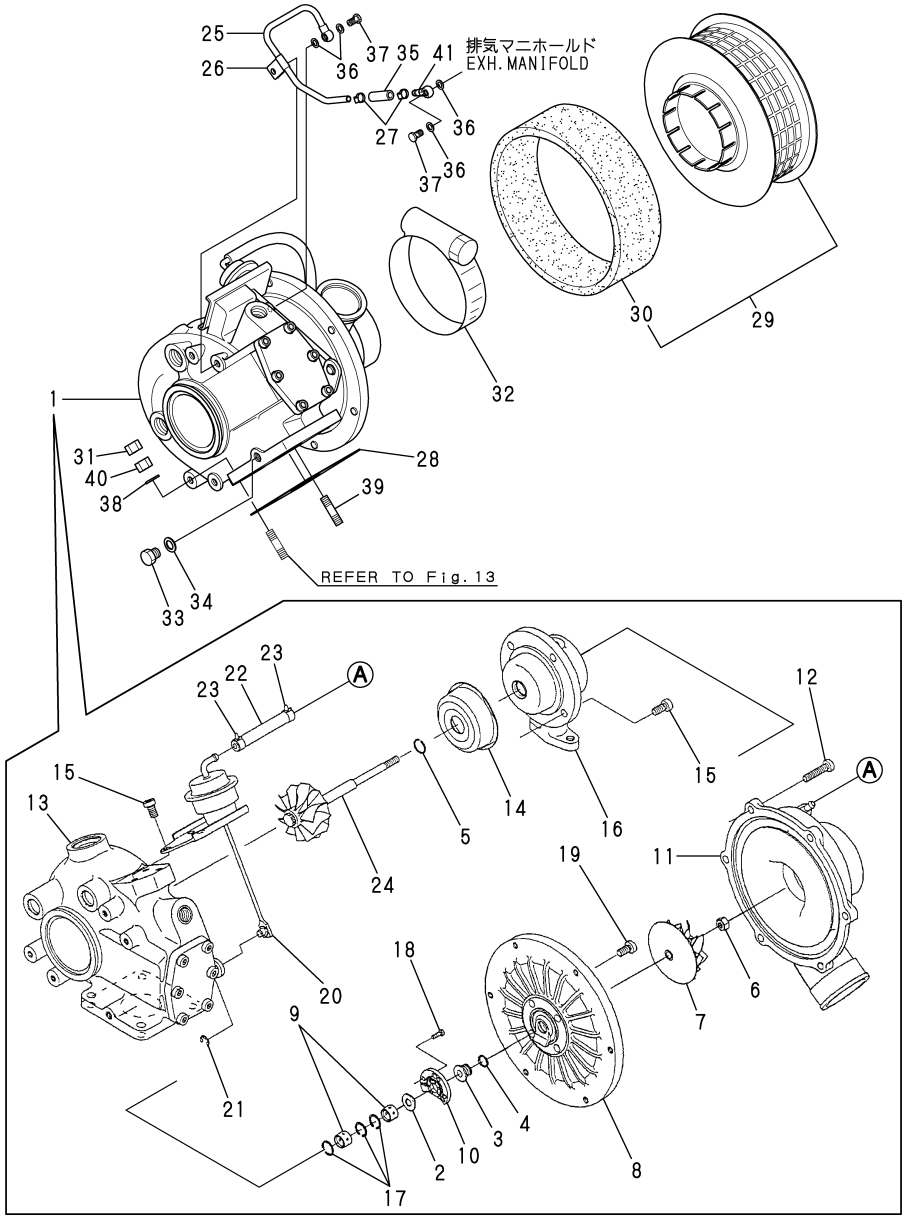

8. TURBOCHARGER

(A)=6LPA-STP2 (D)=
(B)=6LPA-STZP2 (E)=
(C)=6LPA-STZP3 (F)=

REF.	LEV.	PARTS NO.	DESCRIPTION	Q'TY (A)	(B)	(C)	(D)	(E)	(F)	I	R
1	1	119775-18150	TURBOCHARGER,RHE62W	1	1	1					
2	2	XNH361400	BUSH	1	1	1					
3	2	XNH361401	COVER	1	1	1					
4	2	XNH261605	RING, SEAL	1	1	1					
5	2	XNH261604	RING, SEAL	1	1	1					
6	2	XNN171110	LOCK NUT	1	1	1					
7	2	XNH364606	IMPELLA (COMPRESSER	1	1	1					
8	2	XNH362112	SEAL PLATE	1	1	1					
9	2	XNH363001	METAL, FLOATING	2	2	2					
10	2	XNH363051	THRUST BEARING	1	1	1					
11	2	XNH364405	HOUSING(COMPRESSER	1	1	1					
12	2	XNH733104	FLAT BOLT	6	6	6					
13	2	XNH365418	HOUSING, TURBINE	1	1	1					
14	2	XNH365303	PLATE	1	1	1					
15	2	XNH362809	FLAT BOLT	4	4	4					
16	2	XNH362709	HOUSING, BEARING	1	1	1					
17	2	XNH362810	RETAINING RING	3	3	3					
18	2	XNH362802	SCREW	3	3	3					
19	2	XNH362803	SCREW	4	4	4					
20	2	XNH964771	ACTUATOR	1	1	1					
21	2	XJD532012	CIRCLIP	1	1	1					
22	2	XNH978931	BOOST HOSE	1	1	1					
23	2	XNN976562	CLAMP	2	2	2					
24	2	XNH361206	TURBIN SHAFT ASSY	1	1	1					
25	1	119773-18701	PIPE,AIR	1	1	1					
26	1	119773-18730	RETAINER (C)	1	1	1					
27	1	119172-48130	BAND	2	2	2					
28	1	119773-18250	GASKET, TURBO.INLET	1	1	1					
29	1	119773-18850	SILENCER	1	1	1					
30	2	119593-18880	FILTER	1	1	1					
31	1	26703-100002	NUT M10	4	4	4					
32	1	123658-18910	CLAMP	1	1	1					
33	1	23893-010002	PLUG PF1/8	1	1	1					
34	1	23414-100000	GASKET 10, ROUND	1	1	1					
35	1	127695-49430	JOINT	1	1	1					
36	1	23414-080012	GASKET 8	4	4	4					
37	1	23857-030000	JOINT BOLT 3	2	2	2					
38	1	22117-100000	WASHER 10	1	1	1					
39	1	26213-100252	STUD M10X 25	1	1	1					
40	1	26706-100002	NUT M10	1	1	1					
41	1	104264-59030	JOINT 8, PIPE	1	1	1					

N:Old $\overset{\text{Yes}}{\underset{\text{No}}{\leftrightarrows}}$ New, Q:Old $\overset{\text{No}}{\underset{\text{Yes}}{\leftrightarrows}}$ New, R:Old $\overset{\text{Yes}}{\underset{\text{Yes}}{\leftrightarrows}}$ New, S:Old $\overset{\text{No}}{\underset{\text{No}}{\leftrightarrows}}$ New, W:Add, Z:Discontinued, F:Interchangeable by set, K:Q'ty Change

(C)Copy Rights YANMAR CO.,LTD.

Fig.9. EXHAUST BEND

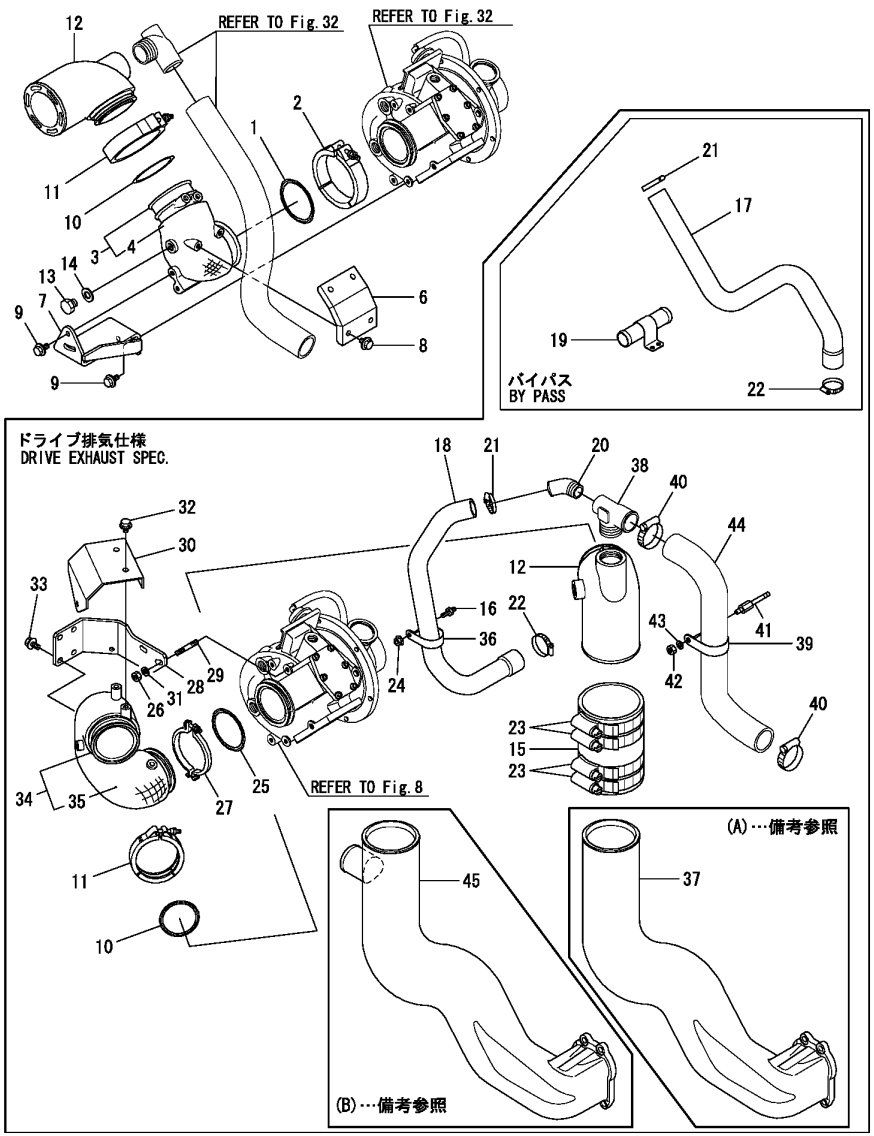

Remarks
(1)(A)119778-13640=>IT APPLIES EXCLUDING THE USA.
(2)(B)119778-13650=>IT APPLIES TO THE USA.

9. EXHAUST BEND

(A)=6LPA-STP2 (D)=
(B)=6LPA-STZP2 (E)=
(C)=6LPA-STZP3 (F)=

REF.	LEV.	PARTS NO.	DESCRIPTION	Q'TY (A)	(B)	(C)	(D)	(E)	(F)	I	R
1	1	119773-13250	GASKET,TURBOCHARGER	1	1	1					
2	1	119773-13300	V-CLAMP	1	1	1					
3	1	119778-13301	BEND, EXH	1	1	1					
4	2	119778-13311	MAT, WOOL	1	1	1					
6	1	119778-13330	INSULATOR	1	1	1					
7	1	119778-13370	BRACKET, BEND	1	1	1					
8	1	26106-080122	BOLT M 8X 12 PLATED	4	4	4					
9	1	26106-080162	BOLT M 8X 16 PLATED	4	4	4					
10	1	119773-13250	GASKET,TURBOCHARGER	1	1	1					
11	1	119773-13300	V-CLAMP	1	1	1					
12	1	119773-13501	MIXING ELBOW	1	1	1					
13	1	23893-020002	PLUG PF1/4	1	1	1					
14	1	23414-130000	GASKET 13, ROUND	1	1	1					
15	1	119175-13800	RUBBER JOINT		1	1					
16	1	114973-13950	BOLT		1	1					
17	1	119778-49070	HOSE,CWS,BYPASS		1	1					
18	1	119778-49080	HOSE,DRIVE IN		1	1					
19	1	119778-49200	TUBE,DRIVE		1	1					
20	1	119175-49550	ELBOW,SEA WATER		2	2					
21	1	119172-48350	CLAMP 35		2	2					
22	1	119172-48410	CLAMP 41		2	2					
23	1	119172-48010	HOSE CLIPS		4	4					
24	1	26306-080002	NUT		1	1					
25	1	119773-13250	GASKET,TURBOCHARGER		1	1					
26	1	26306-080002	NUT		2	2					
27	1	119773-13300	V-CLAMP		1	1					
28	1	119778-13550	BLACKET		1	1					
29	1	128170-13600	STUD		2	2					
30	1	119175-13700	COVER		1	1					
31	1	22137-080000	WASHER 8, POLISHED		1	1					
32	1	26106-080122	BOLT M 8X 12 PLATED		3	3					
33	1	26106-080162	BOLT M 8X 16 PLATED		4	4					
34	1	119175-13301	BEND,EXH		1	1					
35	2	119175-13320	PAD		1	1					
36	1	127610-03270	RETAINER		1	1					
37	1	119778-13640	PIPE,EXT(DRIVE		1	1					1
38	1	119778-48620	BEND,90 ELBOW		1	1					
38-1	1	119779-48620	BEND,90 ELBOW		1	1				R	
		(B=*2002.01)	(C=*2002.01)								
39	1	119593-49080	CLAMP		1	1					
40	1	23000-054000	CLAMP 54		2	2					
41	1	119778-49800	BOLT		1	1					
42	1	26716-080002	NUT M 8		1	1					
43	1	22117-080000	WASHER 8		1	1					
44	1	119778-49040	HOSE,MIX.IN		1	1					
44-1	1	119779-49040	HOSE,MIX.IN		1	1				R	
		(B=*2001.04)	(C=*2001.04)								
45	1	119778-13650	PIPE, EXHAUST		1	1				W	2
		(B=*2009.03)	(C=*2009.03)								

N:Old $\overset{\text{Yes}}{\underset{\text{No}}{\leftrightarrow}}$ New, Q:Old $\overset{\text{No}}{\underset{\text{Yes}}{\leftrightarrow}}$ New, R:Old $\overset{\text{Yes}}{\underset{\text{Yes}}{\leftrightarrow}}$ New, S:Old $\overset{\text{No}}{\underset{\text{No}}{\leftrightarrow}}$ New, W:Add, Z:Discontinued, F:Interchangeable by set, K:Q'ty Change

(C)Copy Rights YANMAR CO.,LTD.

Fig.10. AIR COOLER

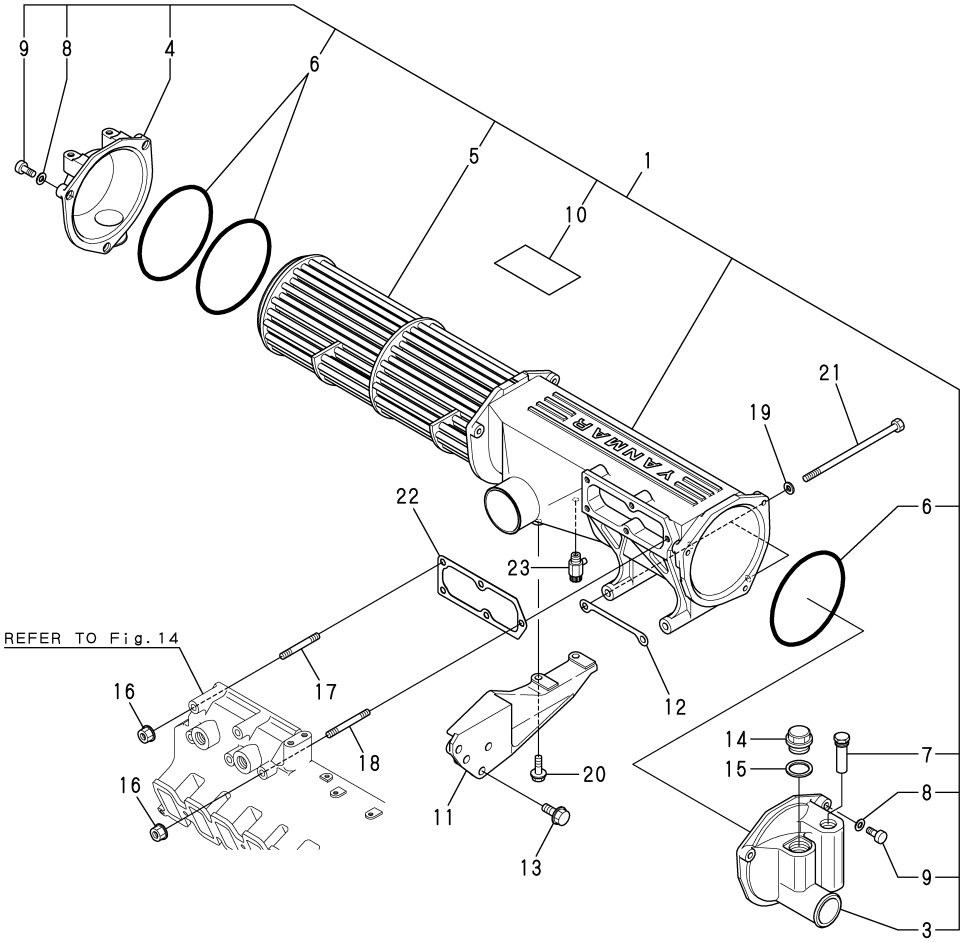

10. AIR COOLER

(A)=6LPA-STP2 (D)=
(B)=6LPA-STZP2 (E)=
(C)=6LPA-STZP3 (F)=

REF.	LEV.	PARTS NO.	DESCRIPTION	Q'TY (A)	(B)	(C)	(D)	(E)	(F)	I	R
1	1	119773-18100	INTERCOOLER	1	1	1					
3	2	119773-18340	WATER BOX	1	1	1					
4	2	119773-18330	WATER BOX	1	1	1					
5	2	119773-18320	TUBESTACK	1	1	1					
6	2	119773-18350	O-RING	3	3	3					
7	2	119574-18790	ZINC, ANTI-CORROSIVE	1	1	1					
8	2	X211810030	WASHER	6	6	6					
9	2	X214320104	SCREW	6	6	6					
10	2	119773-18360	LABEL	1	1	1					
11	1	119773-18160	BRACKET, COOLER	1	1	1					
12	1	119773-18181	GASKET,INTERCOOLER	1	1	1					
13	1	26136-100252	BOLT M10X25	2	2	2					
14	1	119773-18410	PLUG,M26X1.5	1	1	1					
15	1	22190-270002	SEAL WASHER 27S	1	1	1					
16	1	26306-080002	NUT	5	5	5					
17	1	26226-080652	STUD M 8X 65 PLATED	2	2	2					
18	1	26226-080752	STUD M 8X 75 PLATED	3	3	3					
19	1	22117-080000	WASHER 8	2	2	2					
20	1	26106-080252	BOLT M 8X 25 PLATED	2	2	2					
21	1	26116-081652	BOLT M 8X165	2	2	2					
22	1	119773-18121	GASKET,INTERCOOLER	1	1	1					
23	1	119620-49290	COCK ASSY 1/4	1	1	1					

N:Old $\frac{\text{Yes}}{\text{No}}$ New, Q:Old $\frac{\text{No}}{\text{Yes}}$ New, R:Old $\frac{\text{Yes}}{\text{Yes}}$ New, S:Old $\frac{\text{No}}{\text{No}}$ New, W:Add, Z:Discontinued, F:Interchangeable by set, K:Q'ty Change

(C)Copy Rights YANMAR CO.,LTD.

Fig.11. AIR DUCT

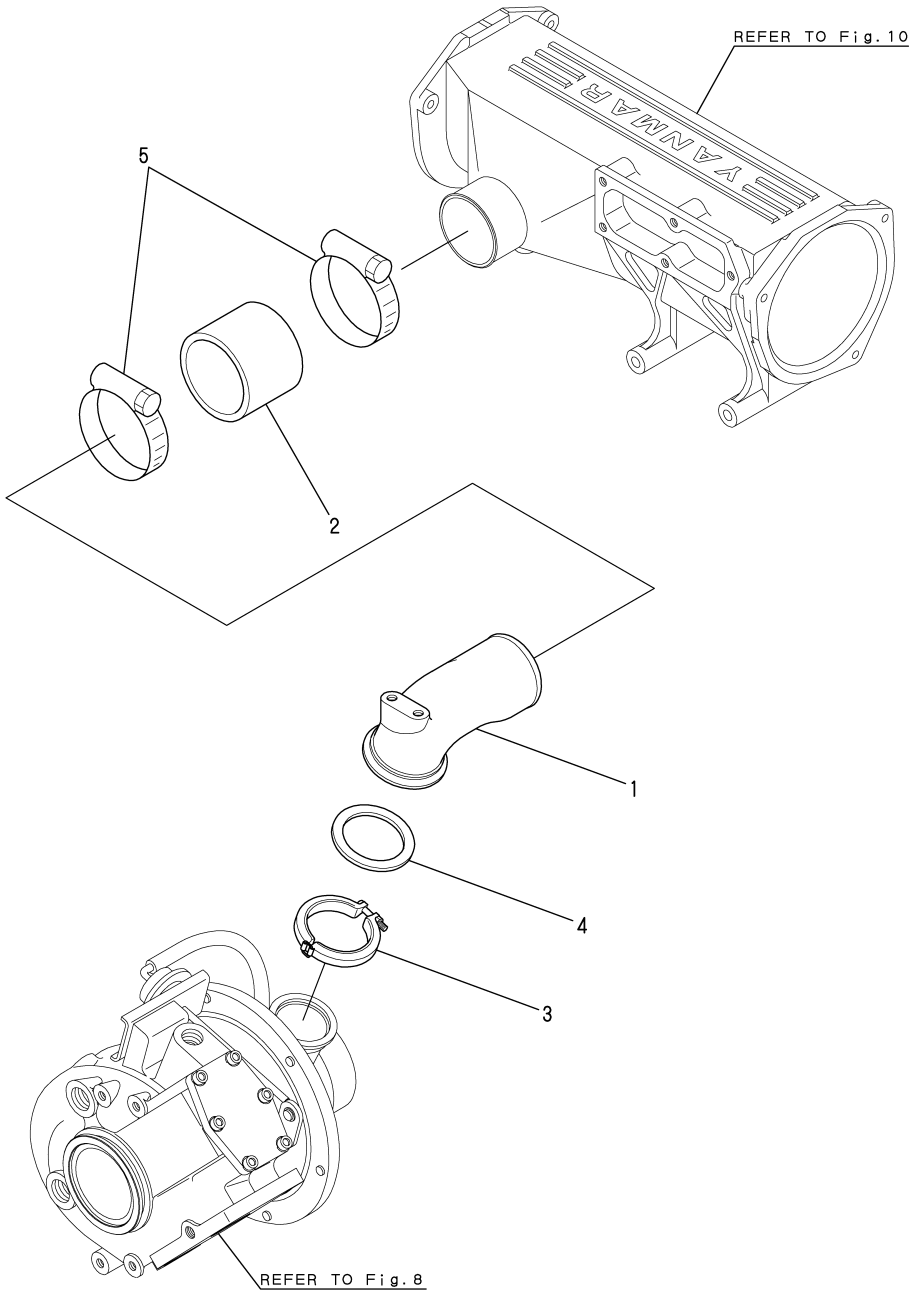

11. AIR DUCT

(A)=6LPA-STP2 (D)=
(B)=6LPA-STZP2 (E)=
(C)=6LPA-STZP3 (F)=

REF.	LEV.	PARTS NO.	DESCRIPTION	Q'TY (A)	(B)	(C)	(D)	(E)	(F)	I	R
1	1	119773-18210	AIRDUCT	1	1	1					
2	1	119574-18250	HOSE,AIR DUCT	1	1	1					
3	1	119574-18700	V-CLAMP	1	1	1					
4	1	119593-18800	GASKET (T/C OUT	1	1	1					
5	1	119574-18910	CLAMP	2	2	2					

N:Old $\overset{\text{Yes}}{\underset{\text{No}}{\leftrightarrows}}$ New, Q:Old $\overset{\text{No}}{\underset{\text{Yes}}{\leftrightarrows}}$ New, R:Old $\overset{\text{Yes}}{\underset{\text{Yes}}{\leftrightarrows}}$ New, S:Old $\overset{\text{No}}{\underset{\text{No}}{\leftrightarrows}}$ New, W:Add, Z:Discontinued, F:Interchangeable by set, K:Q'ty Change

(C)Copy Rights YANMAR CO.,LTD.

Fig.12. BOOST CONTROL

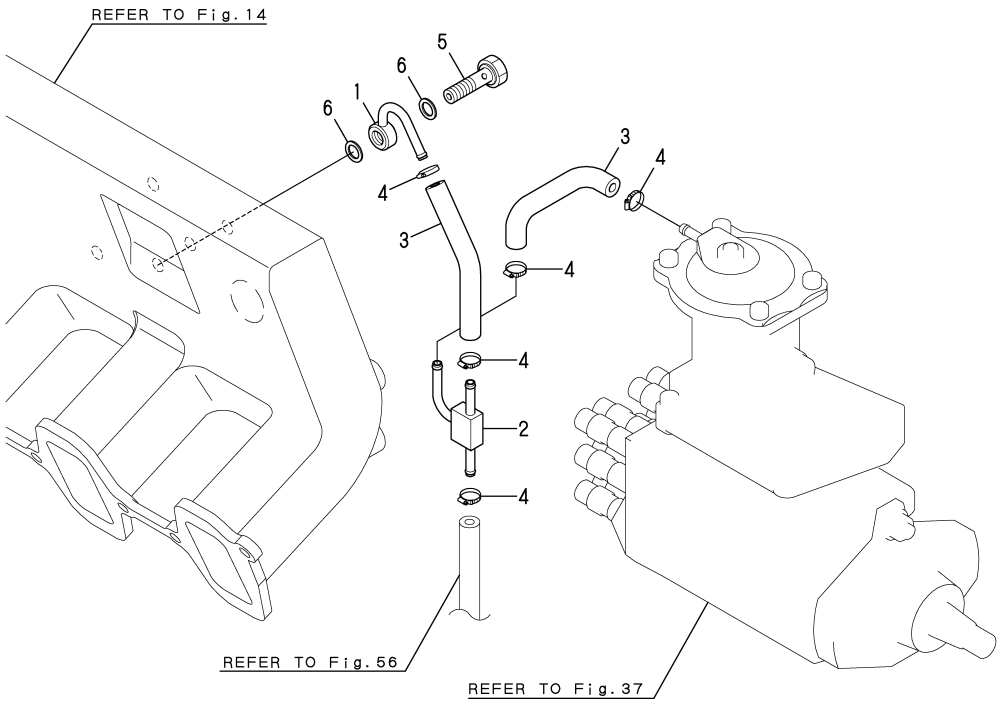

12. BOOST CONTROL

(A)=6LPA-STP2 (D)=
(B)=6LPA-STZP2 (E)=
(C)=6LPA-STZP3 (F)=

REF.	LEV.	PARTS NO.	DESCRIPTION	Q'TY (A)	(B)	(C)	(D)	(E)	(F)	I	R
1	1	119773-18530	JOINT, PIPE	1	1	1					
2	1	119773-18540	JOINT	1	1	1					
3	1	119773-18560	JOINT	2	2	2					
4	1	119172-48130	BAND	4	4	4					
5	1	129198-59540	BOLT 8, PIPE JOINT	1	1	1					
6	1	23414-080000	GASKET 8, ROUND	2	2	2					

N:Old $\xleftrightarrow[\text{No}]{\text{Yes}}$ New, Q:Old $\xleftrightarrow[\text{Yes}]{\text{No}}$ New, R:Old $\xleftrightarrow[\text{Yes}]{\text{Yes}}$ New, S:Old $\xleftrightarrow[\text{No}]{\text{No}}$ New, W:Add, Z:Discontinued, F:Interchangeable by set, K:Q'ty Change

(C)Copy Rights YANMAR CO.,LTD.

Fig.13. EXHAUST MANIFOLD

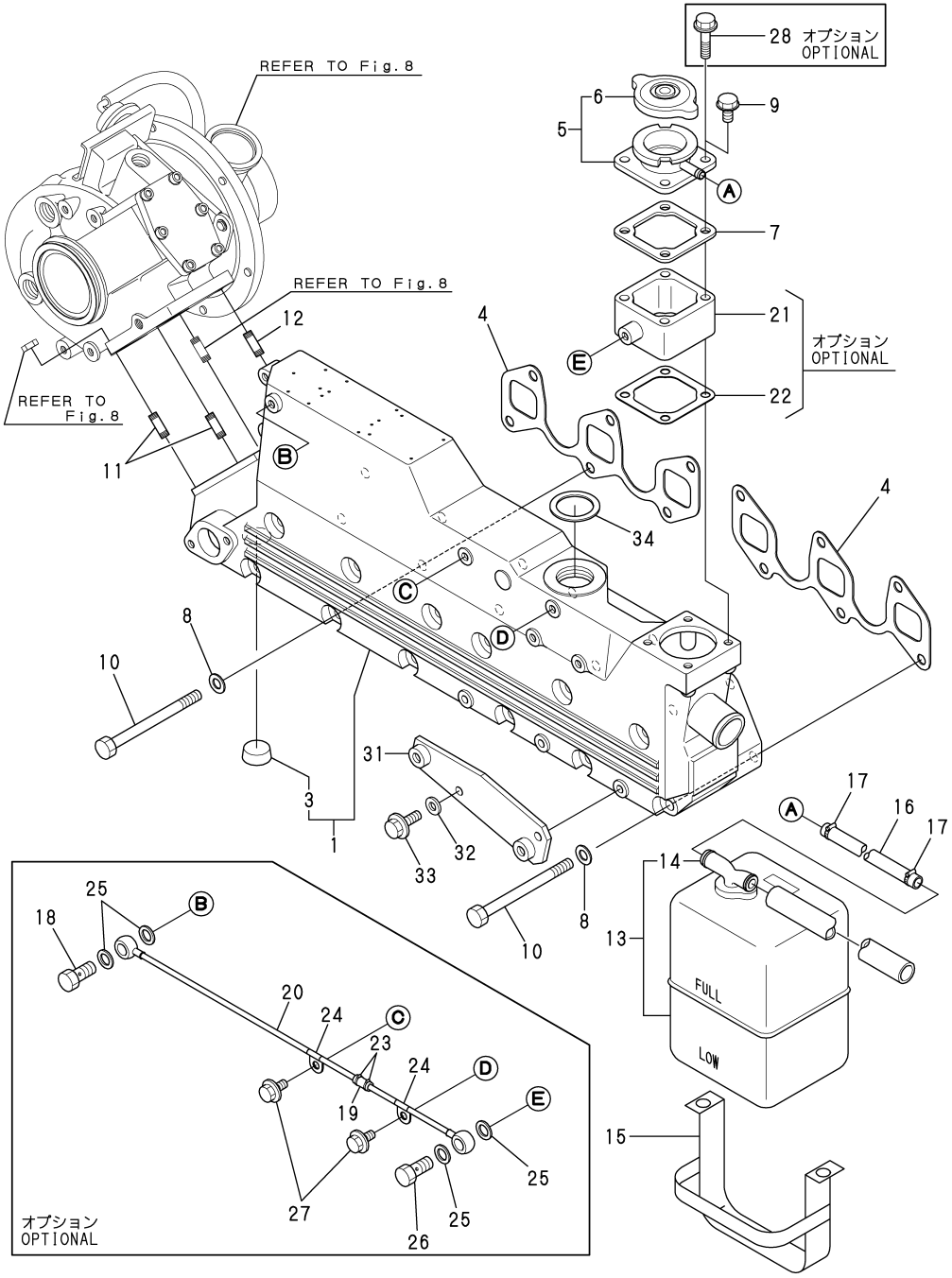

13. EXHAUST MANIFOLD

(A)=6LPA-STP2
(B)=6LPA-STZP2
(C)=6LPA-STZP3
(D)=
(E)=
(F)=

	REF.	LEV.	PARTS NO.	DESCRIPTION	Q'TY (A)	(B)	(C)	(D)	(E)	(F)	I	R
	1	1	119773-13100	MANIFOLD,EXHAUST	1	1	1					
	3	2	119773-13160	PLUG 28	4	4	4					
	4	1	119773-13200	GASKET,EXH.MANIFOLD	2	2	2					
	5	1	129171-44600	FILLER ASSY	1	1	1					
	6	2	129107-44590	CAP, RADIATOR	1	1	1					
	7	1	120445-44640	GASKET	1	1	1					
	8	1	22117-100000	WASHER 10	12	12	12					
	9	1	26106-080162	BOLT M 8X 16 PLATED	4	4	4					
	10	1	119773-13010	BOLT,M10X130	12	12	12					
	11	1	26223-100252	STUD M10X 25	2	2	2					
	12	1	26213-100252	STUD M10X 25	1	1	1					
	13	1	43230-556830	SUB RESERVOIR ASSY	1	1	1					
	14	2	X0225002201	CONDUCTION ASSY	1	1	1					
	15	1	119574-44560	BRACKET,RESERVOIR	1	1	1					
	16	1	124790-44560	PIPE, C. WATER	1	1	1					
	17	1	23010-013000	CLAMP 13	2	2	2					
	18	1	127616-11960	BOLT	1							
	19	1	119593-18480	JOINT	1							
	20	1	119773-44500	TUBE	2							
	21	1	119595-44600	SPACER,FILLER	1							
	22	1	120445-44640	GASKET	1							
	23	1	119172-48130	BAND	2							
	24	1	23297-060081	RETAINER 6X 8	2							
	25	1	23414-080012	GASKET 8	4							
	26	1	23857-030000	JOINT BOLT 3	1							
	27	1	26106-080122	BOLT M 8X 12 PLATED	2							
	28	1	26106-080602	BOLT M 8X 60 PLATED	4							
	31	1	119778-67200	BRACKET		1	1					
I	31-1	1	119778-67201	BRACKET, SHIFT		1	1					S
			(B=*2008.12)	(C=*2008.12)								
	32	1	22117-080000	WASHER 8		2	2					
	33	1	26106-080222	BOLT M 8X 22 PLATED		2	2					
	34	1	22190-360002	SEAL WASHER 36S	1	1	1					

N:Old $\xleftarrow[\text{No}]{\text{Yes}}$ New, Q:Old $\xleftarrow[\text{Yes}]{\text{No}}$ New, R:Old $\xleftarrow[\text{Yes}]{\text{Yes}}$ New, S:Old $\xleftarrow[\text{No}]{\text{No}}$ New, W:Add, Z:Discontinued, F:Interchangeable by set, K:Q'ty Change

(C)Copy Rights YANMAR CO.,LTD.

Fig.14. SUCTION MANIFOLD

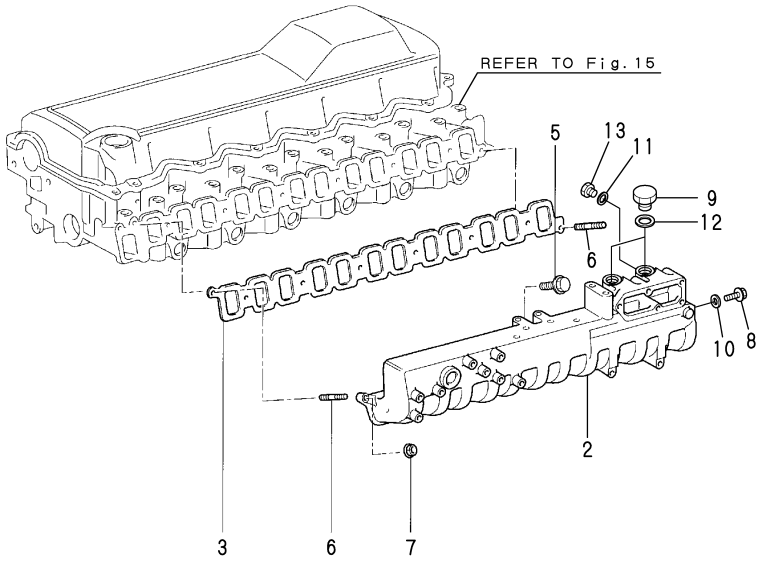

14. SUCTION MANIFOLD

(A)=6LPA-STP2 (D)=
(B)=6LPA-STZP2 (E)=
(C)=6LPA-STZP3 (F)=

REF.	LEV.	PARTS NO.	DESCRIPTION	Q'TY (A)	(B)	(C)	(D)	(E)	(F)	I	R
2	2	119775-12102	MANIFOLD,AIR INTAKE	1	1	1					
3	2	119775-12150	GASKET,INTAKE	1	1	1					
5	2	119770-90740	BOLT,FLANGE	10	10	10					
6	2	119770-90860	BOLT,STUD	2	2	2					
7	2	119770-90630	NUT	2	2	2					
8	1	26106-080162	BOLT M 8X 16 PLATED	1	1	1					
9	1	23887-200002	PLUG 20, HEX.	2	2	2					
10	1	23414-080012	GASKET 8	1	1	1					
11	1	23414-180000	GASKET 18, ROUND	2	2	2					
12	1	23414-200000	GASKET 20, ROUND	2	2	2					
13	1	23887-180002	PLUG 18	2	2	2					

N:Old $\frac{\text{Yes}}{\text{No}}$ New, Q:Old $\frac{\text{No}}{\text{Yes}}$ New, R:Old $\frac{\text{Yes}}{\text{Yes}}$ New, S:Old $\frac{\text{No}}{\text{No}}$ New, W:Add, Z:Discontinued, F:Interchangeable by set, K:Q'ty Change

(C)Copy Rights YANMAR CO.,LTD.

Fig.15. CYLINDER HEAD

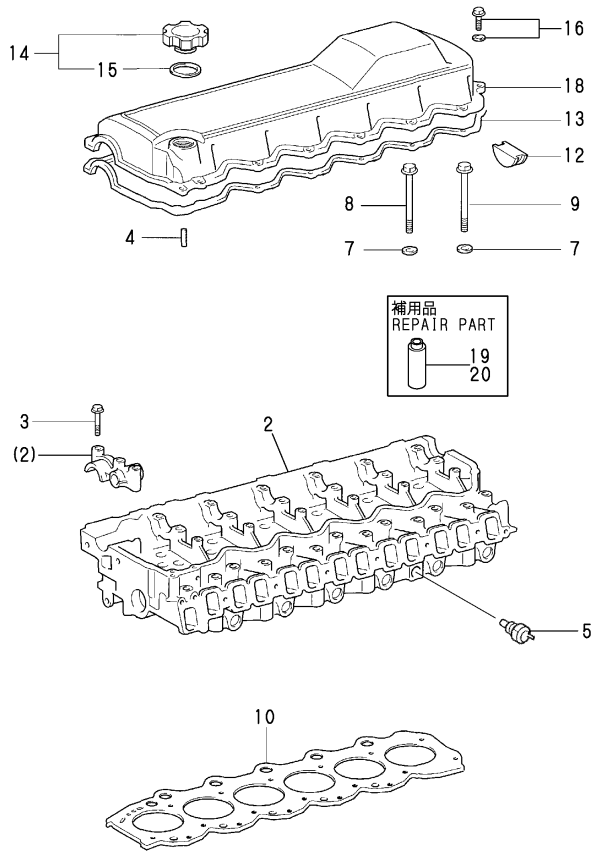

Remarks
(1)REPAIR PART

15. CYLINDER HEAD

(A)=6LPA-STP2 (D)=
(B)=6LPA-STZP2 (E)=
(C)=6LPA-STZP3 (F)=

REF.	LEV.	PARTS NO.	DESCRIPTION	Q'TY (A)	(B)	(C)	(D)	(E)	(F)	I	R
2	2	119771-00012	EAD SUB-ASSY,CYL.	1	1	1					
3	2	119771-90060	BOLT,WAHER BASED	21	21	21					
4	2	119771-90050	PIN,STRAIGHT	2	2	2					
5	2	119770-01230	GAGE,WATER TEMP	1	1	1					
7	2	119770-90070	WASHER,PLATE	26	26	26					
8	2	119771-90070	BOLT	20	20	20					
9	2	119770-90080	BOLT	6	6	6					
10	2	119771-00401	GASKET MARK 1	1	1	1					1
10A	2	119771-00411	GASKET MARK 3	1	1	1					1
10B	2	119771-00421	GASKET MARK 5	1	1	1					1
12	2	119770-00040	PLUG,SEMICIRCULAR	1	1	1					
13	2	119771-00041	GASKET,CYLINDER HEAD	1	1	1					
14	2	119770-00070	CAP ASSY,OIL FILLER	1	1	1					
15	3	119770-90110	GASKET	1	1	1					
16	2	119771-90080	BOLT	12	12	12					
18	2	119771-00031	COVER SUB-ASSY,CYL.	1	1	1					
19	1	119771-02010	VALVE GUIDE(12P/SET	2	2	2					
20	1	119771-02020	V-GUIDE(.05) 12P/SET	2	2	2					

N:Old $\frac{\text{Yes}}{\text{No}}$ New, Q:Old $\frac{\text{No}}{\text{Yes}}$ New, R:Old $\frac{\text{Yes}}{\text{Yes}}$ New, S:Old $\frac{\text{No}}{\text{No}}$ New, W:Add, Z:Discontinued, F:Interchangeable by set, K:Q'ty Change

(C)Copy Rights YANMAR CO.,LTD.

Fig.16. ENGINE LIFTER

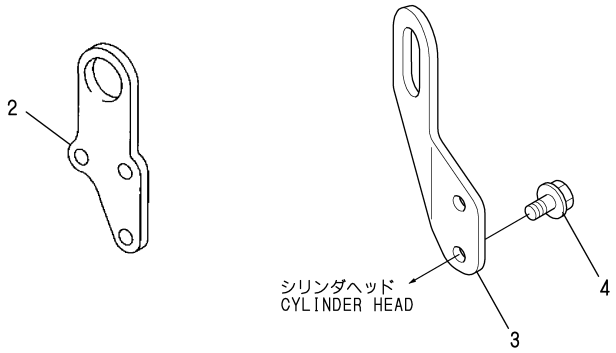

0CR10-G67600

16. ENGINE LIFTER

(A)=6LPA-STP2 (D)=
(B)=6LPA-STZP2 (E)=
(C)=6LPA-STZP3 (F)=

REF.	LEV.	PARTS NO.	DESCRIPTION	Q'TY (A)	(B)	(C)	(D)	(E)	(F)	I	R
2	2	119771-00440	ENGINE HANGER,FR	1	1	1					
3	1	119773-07210	LIFTER,ENGINE,REAR	1	1	1					
4	1	26106-100182	BOLT M10X 18 PLATED	2	2	2					

N:Old $\xleftrightarrow[\text{No}]{\text{Yes}}$ New, Q:Old $\xleftrightarrow[\text{Yes}]{\text{No}}$ New, R:Old $\xleftrightarrow[\text{Yes}]{\text{Yes}}$ New, S:Old $\xleftrightarrow[\text{No}]{\text{No}}$ New, W:Add, Z:Discontinued, F:Interchangeable by set, K:Q'ty Change

(C)Copy Rights YANMAR CO.,LTD.

Fig.17. CAMSHAFT

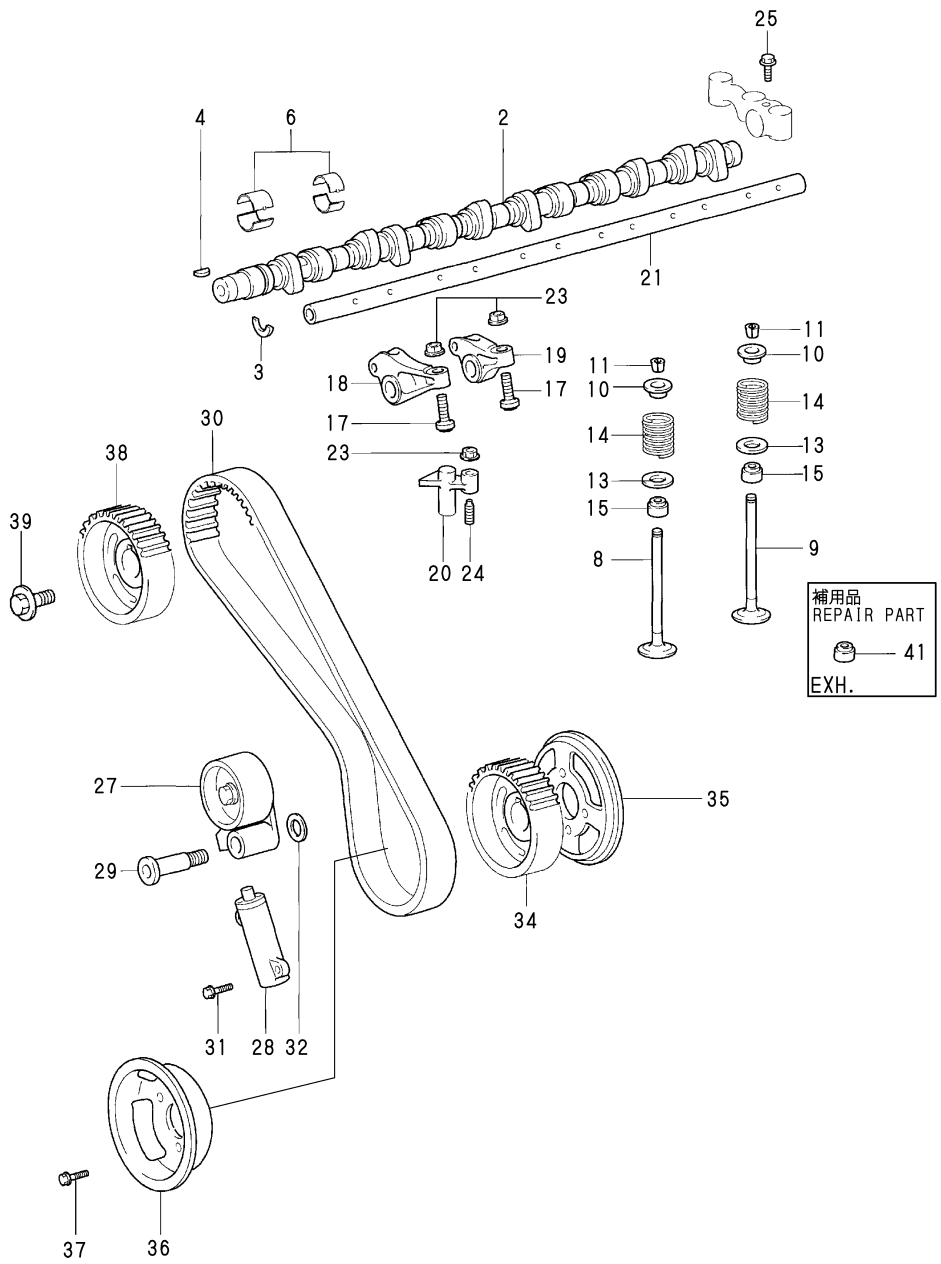

17. CAMSHAFT

(A)=6LPA-STP2 (D)=
(B)=6LPA-STZP2 (E)=
(C)=6LPA-STZP3 (F)=

REF.	LEV.	PARTS NO.	DESCRIPTION	Q'TY (A)	(B)	(C)	(D)	(E)	(F)	I	R
2	2	119771-00450	CAMSHAFT	1	1	1					
3	2	119770-00340	PLAT,CAMSHAFT THRUS	1	1	1					
4	2	119770-90510	KEY,WOOD RUFK	1	1	1					
6	2	119771-00051	BEARING SET,CAMSHAFT	1	1	1					
8	2	119771-00211	VALVE,INTAKE	12	12	12					
9	2	119771-00221	VALVE,EXHAUST	12	12	12					
10	2	119771-00230	RETAINER,VALVE	24	24	24					
11	2	119771-90190	LOCK,VALVE SPRING	48	48	48					
13	2	119771-00240	SEAT,VALVE SPRING	24	24	24					
14	2	119771-90200	SPRING,COMPRESSION	24	24	24					
15	2	119771-90210	SEAL,VALVE STEM OIL	24	24	24					
17	2	119771-00250	SCREW,VALVE	12	12	12					
18	2	119771-00261	ARM SUB-ASSY,VALVE	6	6	6					
19	2	119771-00271	ARM SUB-ASSY,VALVE	6	6	6					
20	2	119771-00280	BRIDGE,VALVE	12	12	12					
21	2	119771-00290	SHAF,VALVE	1	1	1					
23	2	119771-90230	NUT	24	24	24					
24	2	119771-90240	SCREW,VALVE ADJUST.	12	12	12					
25	2	119771-90250	BOLT,FLANGE	2	2	2					
27	2	119771-00170	IDLER	1	1	1					
28	2	119771-00430	TENSIONER	1	1	1					
29	2	119771-00190	SHAFT,TIMING BELT	1	1	1					
30	2	119771-00201	BELT,TIMING	1	1	1					
31	2	119771-90170	BOLT	2	2	2					
32	2	119771-90180	WASHER,PLATE	1	1	1					
34	2	119770-00420	PULLEY,CAMSHAFT TIMI	1	1	1					
35	2	119770-00430	FLANGE,CAMSHAFT TIMI	1	1	1					
36	2	119770-00440	FLANGE,CAMSHAFT TIMI	1	1	1					
37	2	119770-90560	BOLT,WASHER BASED	4	4	4					
38	2	119770-00410	PULLEY,CAMSHAFT TIMI	1	1	1					
39	2	119770-91040	BOLT, W/WASHER	1	1	1					
41	2	119775-11340	SEAL, VALVE STEM	12	12	12					

N:Old $\frac{\text{Yes}}{\text{No}}$ New, Q:Old $\frac{\text{No}}{\text{Yes}}$ New, R:Old $\frac{\text{Yes}}{\text{Yes}}$ New, S:Old $\frac{\text{No}}{\text{No}}$ New, W:Add, Z:Discontinued, F:Interchangeable by set, K:Q'ty Change

(C)Copy Rights YANMAR CO.,LTD.

Fig.18. CRANKSHAFT

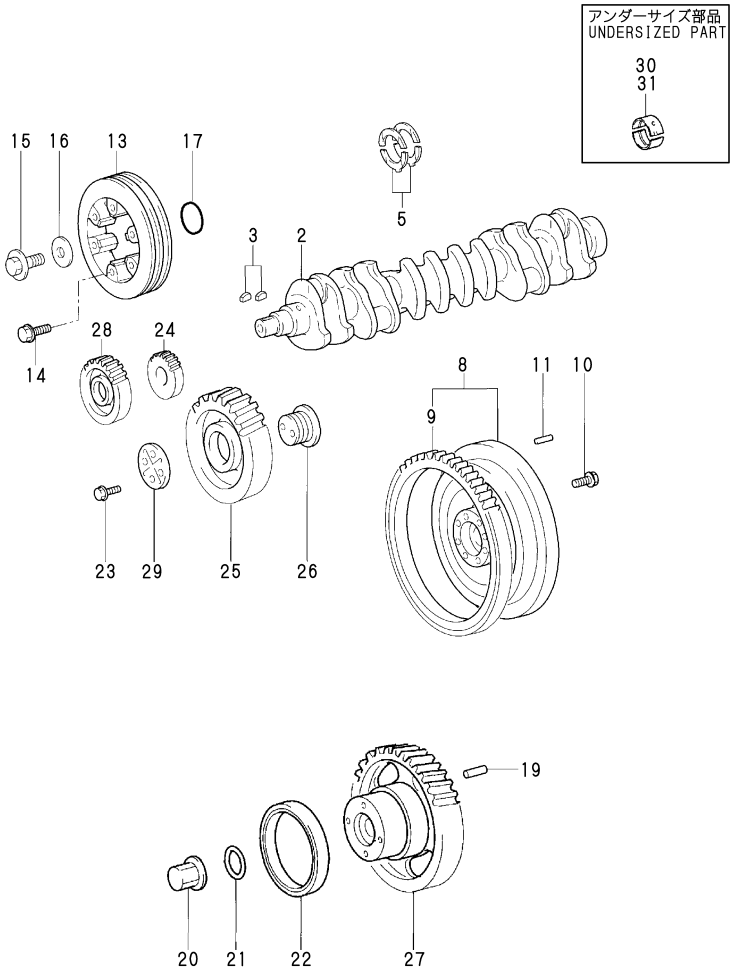

Remarks
(1)REFER TO INTRODUCTION
(2)UNDER SIZED(U.S.=0.25)PART 7 SET
(3)UNDER SIZED(U.S.=0.50)PART 7 SET

0CR10-G67600

18. CRANKSHAFT

(A)=6LPA-STP2 (D)=
(B)=6LPA-STZP2 (E)=
(C)=6LPA-STZP3 (F)=

REF.	LEV.	PARTS NO.	DESCRIPTION	Q'TY (A)	(B)	(C)	(D)	(E)	(F)	I	R
2	2	119770-00292	CRANK SHAFT	1	1	1					
3	2	119770-90440	KEY	2	2	2					
5	2	119770-00130	WASHER SET,CRANK	1	1	1					
8	2	119770-00300	FLYWHEEL SUB-ASSY	1	1	1					
9	3	119770-00310	GEAR,FLYWHEEL RING	1	1	1					
10	2	119770-90450	BOLT,WASHER BASED	8	8	8					
11	2	119770-90460	PIN,STRAIGHT	3	3	3					
13	2	119770-00320	PULLEY SUB-ASSY,CRNK	1	1	1					
14	2	119770-90470	BOLT,WASHER BASED	6	6	6					
15	2	119770-90480	BOLT,WASHER BASED	1	1	1					
16	2	119770-90490	WASHER,PLATE	1	1	1					
17	2	119770-90500	RING,O	1	1	1					
19	2	119770-90160	PIN,STRAINGHT	1	1	1					
20	2	119770-90520	NUT,CAP	1	1	1					
21	2	119770-90530	RING,O	1	1	1					
22	2	119770-90540	BEARING,RADIAL BALL	1	1	1					
23	2	119770-90550	BOLT,WASHER BASED	2	2	2					
24	2	119771-00131	GEAR,CRANKSHAFT TIMI	1	1	1					
25	2	119771-00141	GEAR,IDLE	1	1	1					
26	2	119771-00151	SHAFT,IDLE GEAR	1	1	1					
27	2	119771-00160	GEAR,INJECTION PUMP	1	1	1					
28	2	119770-00360	GEAR,PUMP DRIVE SHAF	1	1	1					
29	2	119770-00381	PLATE,IDLE GEAR THRU	1	1	1					
30	1	119770-02031	BEARING, MAIN US0.25	1	1	1					2
31	1	119770-02041	BEARING, MAIN US0.50	1	1	1					3

N:Old $\overset{\text{Yes}}{\underset{\text{No}}{\leftrightarrows}}$ New, Q:Old $\overset{\text{No}}{\underset{\text{Yes}}{\leftrightarrows}}$ New, R:Old $\overset{\text{Yes}}{\underset{\text{Yes}}{\leftrightarrows}}$ New, S:Old $\overset{\text{No}}{\underset{\text{No}}{\leftrightarrows}}$ New, W:Add, Z:Discontinued, F:Interchangeable by set, K:Q'ty Change

(C)Copy Rights YANMAR CO.,LTD.

Fig.19. DAMPER

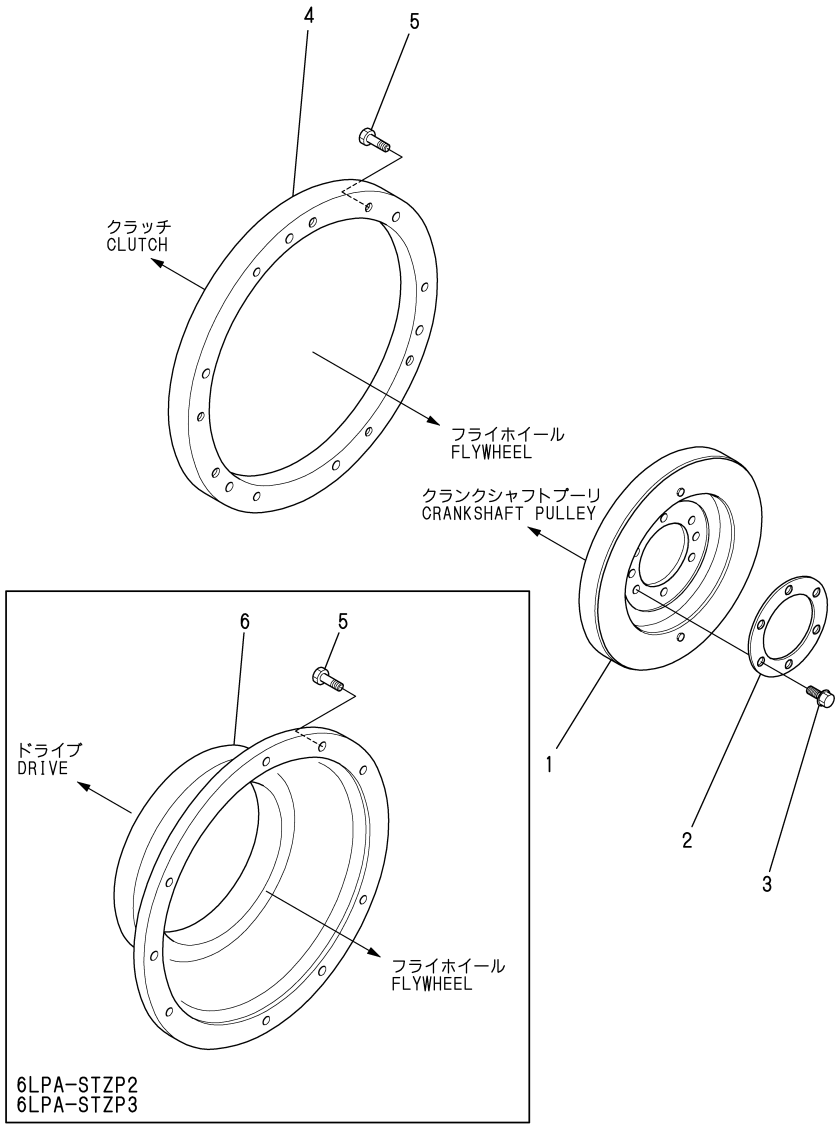

19. DAMPER

(A)=6LPA-STP2 (D)=
(B)=6LPA-STZP2 (E)=
(C)=6LPA-STZP3 (F)=

REF.	LEV.	PARTS NO.	DESCRIPTION	Q'TY (A)	(B)	(C)	(D)	(E)	(F)	I	R
1	1	119773-28010	DAMPER	1	1	1					
2	1	119775-28500	SPACER,FRONT PULLEY	1	1	1					
3	1	119773-28600	BOLT,M 8X 35	6	6	6					
4	1	119773-21510	ADAPTER,FLYWHEEL	1							
5	1	119005-77350	BOLT (M8 X L25)	6	6	6					
6	1	119778-21510	ADAPTER,FLYWHEEL		1	1					

N:Old ◄Yes/No► New, Q:Old ◄No/Yes► New, R:Old ◄Yes/Yes► New, S:Old ◄No/No► New, W:Add, Z:Discontinued, F:Interchangeable by set, K:Q'ty Change

(C)Copy Rights YANMAR CO.,LTD.

Fig.20. PISTON & CONNECTING ROD

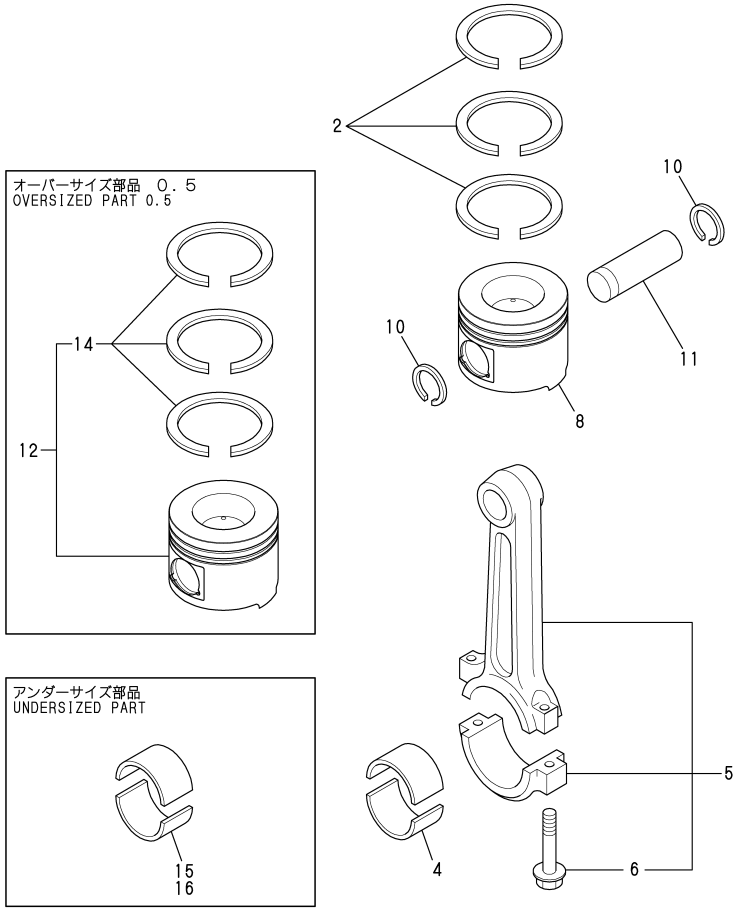

Remarks
(1)REFER TO INTRODUCTION
(2)OVER SIZED(O.S.=0.50)PART 6 SET
(3)UNDER SIZED(U.S.=0.25)PART 6 SET
(4)UNDER SIZED(U.S.=0.50)PART 6 SET
(5)6 SET

0CR10-G67600

20. PISTON & CONNECTING ROD

(A)=6LPA-STP2 (D)=
(B)=6LPA-STZP2 (E)=
(C)=6LPA-STZP3 (F)=

REF.	LEV.	PARTS NO.	DESCRIPTION	Q'TY (A)	(B)	(C)	(D)	(E)	(F)	I	R
2	2	119770-00250	RINGSET,PISTON(6SET)	1	1	1					5
4	2	119770-00260	BEARING SET MARK 2	6	6	6					
4A	2	119770-01010	BEARING SET MARK 3	6	6	6					1
4B	2	119770-01020	BEARING SET MARK 4	6	6	6					1
4C	2	119770-01030	BEARING SET MARK 5	6	6	6					1
4D	2	119770-01040	BEARING SET MARK 6	6	6	6					1
5	2	119770-00270	ROD SUB-ASSY,CONNECT	6	6	6					
6	3	119770-00280	BOLT,CONNECTING ROD	12	12	12					
8	1	119775-22160	PISTON	6	6	6					
10	1	119771-90350	RING	12	12	12					
11	1	119770-02010	PIN, PISTON	6	6	6					
12	1	719775-22110	PISTON ASSY0.5OS6SET	1	1	1					2
14	2	119770-01180	RING SET(0.5OS 6SET	1	1	1					2
15	1	119770-02050	BEARING(U/S0.25 6SET	1	1	1					3
16	1	119770-02060	BEARING(U/S0.50 6SET	1	1	1					4

N:Old $\overset{\text{Yes}}{\underset{\text{No}}{\leftrightarrows}}$ New, Q:Old $\overset{\text{No}}{\underset{\text{Yes}}{\leftrightarrows}}$ New, R:Old $\overset{\text{Yes}}{\underset{\text{Yes}}{\leftrightarrows}}$ New, S:Old $\overset{\text{No}}{\underset{\text{No}}{\leftrightarrows}}$ New, W:Add, Z:Discontinued, F:Interchangeable by set, K:Q'ty Change

(C)Copy Rights YANMAR CO.,LTD.

Fig.21. LUB.OIL COOLER 1

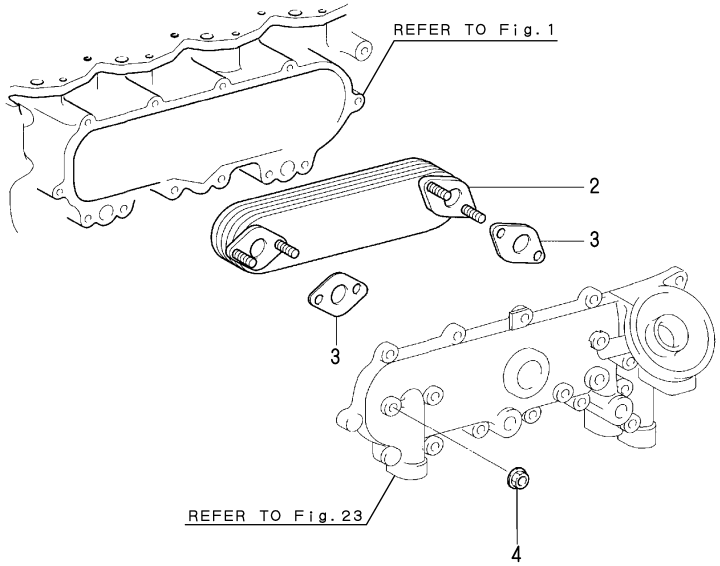

21. LUB.OIL COOLER 1

(A)=6LPA-STP2 (D)=
(B)=6LPA-STZP2 (E)=
(C)=6LPA-STZP3 (F)=

REF.	LEV.	PARTS NO.	DESCRIPTION	Q'TY (A)	(B)	(C)	(D)	(E)	(F)	I	R
2	2	119770-00651	COOLER ASSY,OIL	1	1	1					
3	2	119770-00660	GASKET,OIL COOLER	2	2	2					
4	2	119770-90630	NUT	4	4	4					

N:Old ◄Yes/No► New, Q:Old ◄No/Yes► New, R:Old ◄Yes/Yes► New, S:Old ◄No/No► New, W:Add, Z:Discontinued, F:Interchangeable by set, K:Q'ty Change

(C)Copy Rights YANMAR CO.,LTD.

Fig.22. LUB.OIL COOLER 2

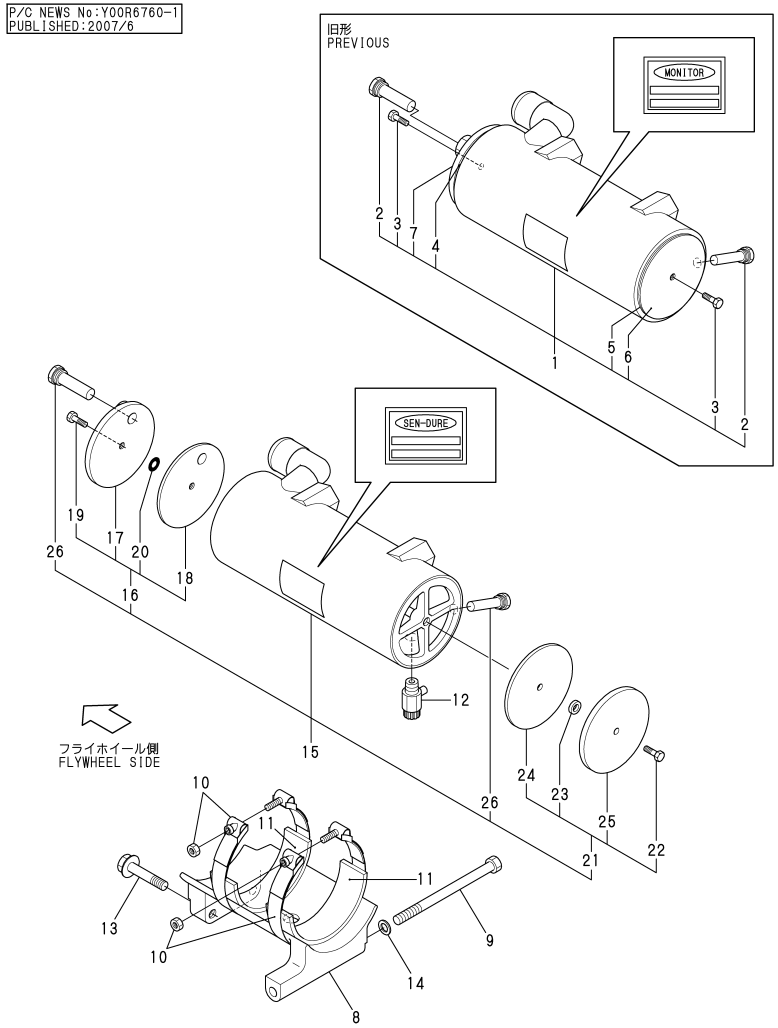

Remarks
(1)THERE ARE A KIT AND INTERCHANGEABILITY OF N0.16 OR N0.21.(NOT INTERCHANGEABLE SINGLE PART.) (2)THERE ARE A KIT AND INTERCHANGEABILITY OF N0.16.
(NOT INTERCHANGEABLE SINGLE PART.)
(3)THERE ARE A KIT AND INTERCHANGEABILITY OF N0.21.
(NOT INTERCHANGEABLE SINGLE PART.)
(4)IT IS ABOUT 2002 MANUFACTURER CHANGE.(MONITOR CO. -> SEN-DURE CO.)THE PART NUMBER DOESN'T HAVE THE CHANGE.

22. LUB.OIL COOLER 2

(A)=6LPA-STP2 (D)=
(B)=6LPA-STZP2 (E)=
(C)=6LPA-STZP3 (F)=

	REF.	LEV.	PARTS NO.	DESCRIPTION	Q'TY (A)	(B)	(C)	(D)	(E)	(F)	I	R
I	1	1	119775-33000	COOLER,LUB.OIL	1	1	1					4
	2	2	119574-44150	ZINC, ANTI-CORROSIVE	2	2	2					
I	3	2	119574-44180	BOLT,UNC 3/8	2	2	2					1
I	4	2	119773-33070	GASKET R	1	1	1					2
I	5	2	119773-33080	GASKET F	1	1	1					3
I	6	2	119773-33060	COVER B CMP	1	1	1					3
I	7	2	119773-33050	COVER,LO COOLER	1	1	1					2
	8	1	119775-33151	BRACKET,OIL COOLER	1	1	1					
	9	1	119775-33170	BOLT.M10X140	1	1	1					
	10	1	119775-33200	CLAMP,T-BOLT	2	2	2					
	11	1	119775-33650	RUBBER SEAT	2	2	2					
	12	1	119620-49290	COCK ASSY 1/4	1	1	1					
	13	1	26106-100502	BOLT M10X 50 PLATED	2	2	2					
	14	1	22117-100000	WASHER 10	1	1	1					
I	15	1	119775-33000	COOLER,LUB.OIL	1	1	1					4
I	16	2	119775-33100	SPARE COVER KIT3	1	1	1				W	
		(A=*2007.04)	(B=*2007.04)	(C=*2007.04)								
I	17	3	119775-33060	SEPARATOR COVER(R	1	1	1					
I	18	3	119775-33070	4 INCH GASKET(R	1	1	1					
I	19	3	119175-33340	BOLT UNC 3/8-16X3/4	1	1	1					
I	20	3	119175-33350	O-RING	1	1	1					
I	21	2	119175-33320	SPARE COVER KIT2	1	1	1				W	
		(A=*2007.04)	(B=*2007.04)	(C=*2007.04)								
I	22	3	119175-33330	BOLT UNC 3/8-16X5/8	1	1	1					
I	23	3	119175-33360	RUBBER GASKET	1	1	1					
I	24	3	119175-33370	4 INCH GASKET	1	1	1					
I	25	3	119175-33390	SEPARATOR COVER	1	1	1					
I	26	2	119574-44150	ZINC, ANTI-CORROSIVE	2	2	2					

N:Old ←Yes/No→ New, Q:Old ←No/Yes→ New, R:Old ←Yes/Yes→ New, S:Old ←No/No→ New, W:Add, Z:Discontinued, F:Interchangeable by set, K:Q'ty Change

(C)Copy Rights YANMAR CO.,LTD.

Fig.23. LUB.OIL COOLER COVER

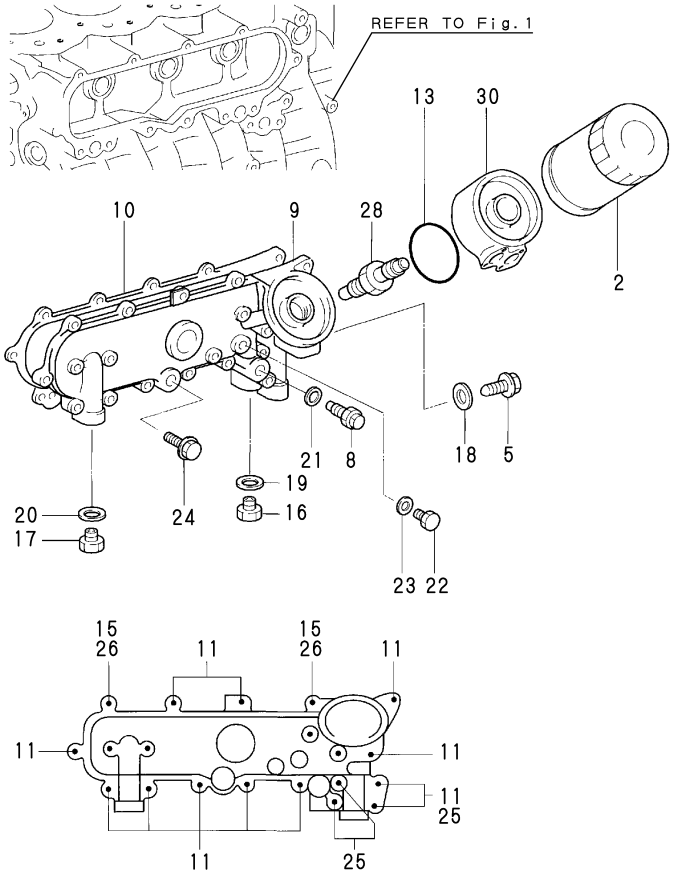

23. LUB.OIL COOLER COVER

(A)=6LPA-STP2 (D)=
(B)=6LPA-STZP2 (E)=
(C)=6LPA-STZP3 (F)=

REF.	LEV.	PARTS NO.	DESCRIPTION	Q'TY (A)	(B)	(C)	(D)	(E)	(F)	I	R
2	2	119770-90620	OIL FILTER	1	1	1					
5	2	119770-00670	VALVE SUB-ASSY,OIL	1	1	1					
8	2	119770-00680	VALVE ASSY,OIL COOLE	1	1	1					
9	2	119770-00692	COVER,OIL COOLER	1	1	1					
10	2	119770-00710	GASKET,OIL COOLER	1	1	1					
11	2	119770-90260	BOLT,FLANGE	12	12	12					
13	2	119771-90260	O-RING	1	1	1					
15	2	119770-90630	NUT	2	2	2					
16	2	119770-90650	PLUG,W/HEAD STRAIGHT	1	1	1					
17	2	119770-90660	PLUG,W/HEAD STRAIGHT	1	1	1					
18	2	119770-90670	GASKET	1	1	1					
19	2	119770-90680	GASKET	1	1	1					
20	2	119770-90690	GASKET	2	2	2					
21	2	119770-90700	GASKET	1	1	1					
22	2	119770-90710	PLUG,STRAIGHT SCREW	1	1	1					
23	2	119770-90720	GASKET	1	1	1					
24	2	119770-90730	PLUG,TAPER SCREW	1	1	1					
25	2	119770-90740	BOLT,FLANGE	2	2	2					
26	2	119770-90750	BOLT, STUD	2	2	2					
28	2	119775-35080	UNION	1	1	1					
30	2	119775-35060	SPACER	1	1	1					

N:Old $\xleftrightarrow[\text{No}]{\text{Yes}}$ New, Q:Old $\xleftrightarrow[\text{Yes}]{\text{No}}$ New, R:Old $\xleftrightarrow[\text{Yes}]{\text{Yes}}$ New, S:Old $\xleftrightarrow[\text{No}]{\text{No}}$ New, W:Add, Z:Discontinued, F:Interchangeable by set, K:Q'ty Change

(C)Copy Rights YANMAR CO.,LTD.

Fig.24. LUB.OIL PIPE

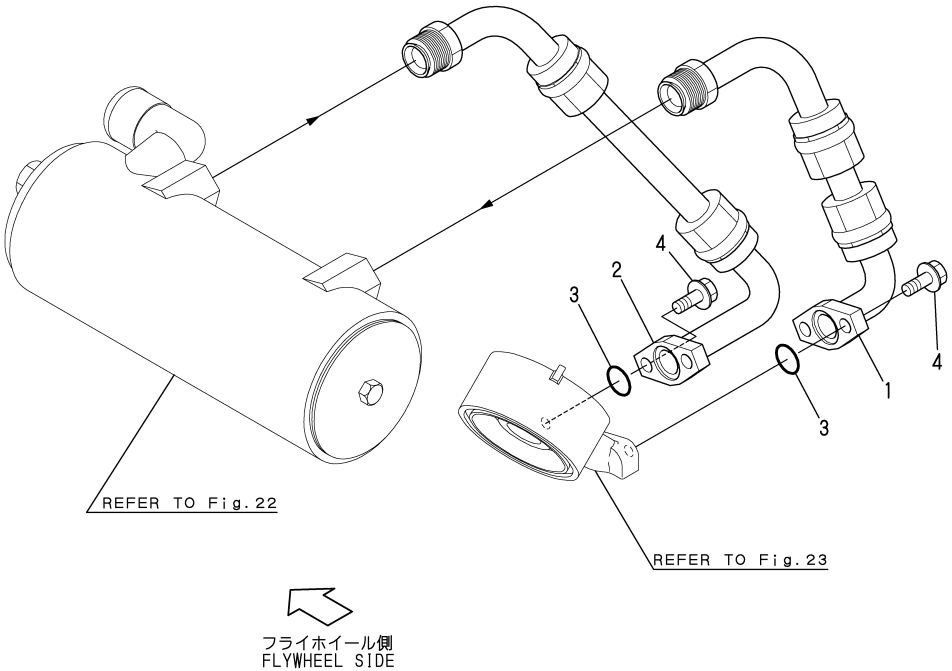

0CR10-G67600

24. LUB.OIL PIPE

(A)=6LPA-STP2 (D)=
(B)=6LPA-STZP2 (E)=
(C)=6LPA-STZP3 (F)=

REF.	LEV.	PARTS NO.	DESCRIPTION	Q'TY (A)	(B)	(C)	(D)	(E)	(F)	I	R
1	1	119775-39121	PIPE, LUB. OIL	1	1	1					
2	1	119775-39141	PIPE, LUB. OIL	1	1	1					
3	1	24311-000200	O-RING 1A P-20.0	2	2	2					
4	1	26106-080202	BOLT M 8X 20 PLATED	4	4	4					

N:Old $\overset{\text{Yes}}{\underset{\text{No}}{\leftrightarrows}}$ New, Q:Old $\overset{\text{No}}{\underset{\text{Yes}}{\leftrightarrows}}$ New, R:Old $\overset{\text{Yes}}{\underset{\text{Yes}}{\leftrightarrows}}$ New, S:Old $\overset{\text{No}}{\underset{\text{No}}{\leftrightarrows}}$ New, W:Add, Z:Discontinued, F:Interchangeable by set, K:Q'ty Change

(C)Copy Rights YANMAR CO.,LTD.

Fig.25. LUB.OIL PIPE(TURBOCHARGER)

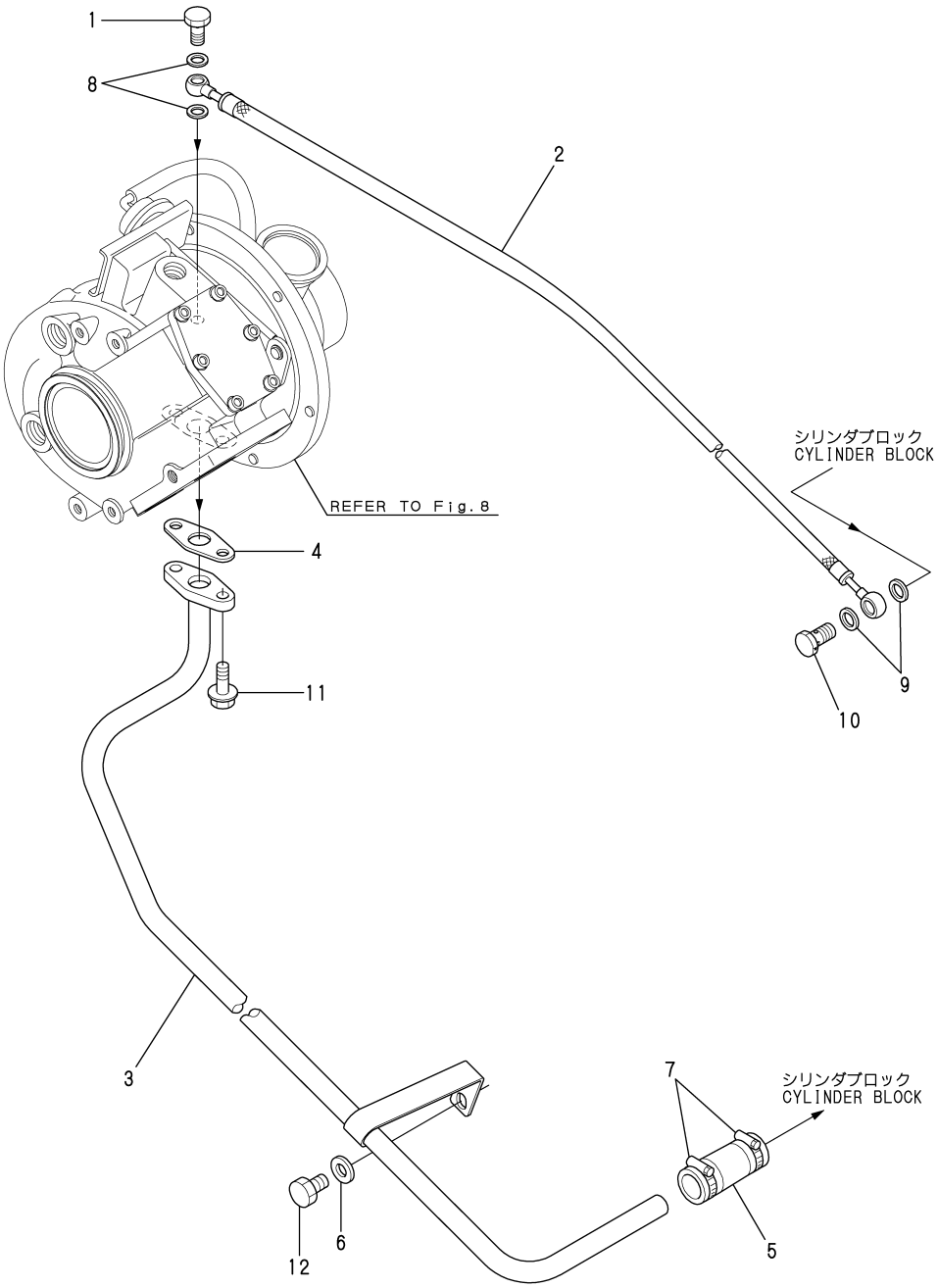

25. LUB.OIL PIPE(TURBOCHARGER)

(A)=6LPA-STP2 (D)=
(B)=6LPA-STZP2 (E)=
(C)=6LPA-STZP3 (F)=

REF.	LEV.	PARTS NO.	DESCRIPTION	Q'TY (A)	(B)	(C)	(D)	(E)	(F)	I	R
1	1	121252-39150	BOLT, PIPE JOINT	1	1	1					
2	1	119773-39610	PIPE,TUUB.IN,LO.	1	1	1					
3	1	119773-39671	PIPE,TURB.OUT,LO.	1	1	1					
4	1	119593-39690	GASKET	1	1	1					
5	1	119773-39820	HOSE,T/C OIL	1	1	1					
6	1	22117-120000	WASHER 12	1	1	1					
7	1	119172-48280	CLAMP 28	2	2	2					
8	1	23414-100000	GASKET 10, ROUND	2	2	2					
9	1	23414-120000	GASKET 12, ROUND	2	2	2					
10	1	23857-060000	JOINT BOLT 6,PIPE	1	1	1					
11	1	26106-100222	BOLT M10X 22 PLATED	2	2	2					
12	1	26156-120202	BOLT M12X 20 PLATED	1	1	1					

N:Old $\frac{\text{Yes}}{\text{No}}$ New, Q:Old $\frac{\text{No}}{\text{Yes}}$ New, R:Old $\frac{\text{Yes}}{\text{Yes}}$ New, S:Old $\frac{\text{No}}{\text{No}}$ New, W:Add, Z:Discontinued, F:Interchangeable by set, K:Q'ty Change

(C)Copy Rights YANMAR CO.,LTD.

Fig.26. OIL SUCTION/DRAIN PUMP

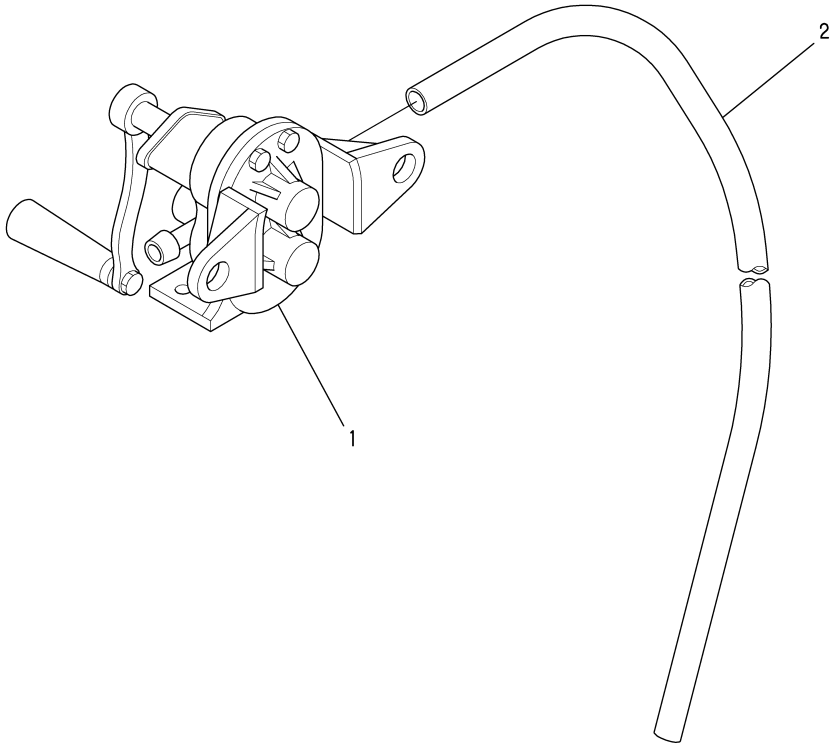

0CR10-G67600

26. OIL SUCTION/DRAIN PUMP

(A)=6LPA-STP2 (D)=
(B)=6LPA-STZP2 (E)=
(C)=6LPA-STZP3 (F)=

REF.	LEV.	PARTS NO.	DESCRIPTION	Q'TY (A)	(B)	(C)	(D)	(E)	(F)	I	R
1	1	124413-39100	PUMP, OIL SUMP	1	1	1					
2	1	120130-39990	HOSE,OIL DRAIN 3M	1	1	1					

N:Old $\xleftarrow[\text{No}]{\text{Yes}}$ New, Q:Old $\xleftarrow[\text{Yes}]{\text{No}}$ New, R:Old $\xleftarrow[\text{Yes}]{\text{Yes}}$ New, S:Old $\xleftarrow[\text{No}]{\text{No}}$ New, W:Add, Z:Discontinued, F:Interchangeable by set, K:Q'ty Change

(C)Copy Rights YANMAR CO.,LTD.

Fig.27. COOLING SEA WATER PUMP

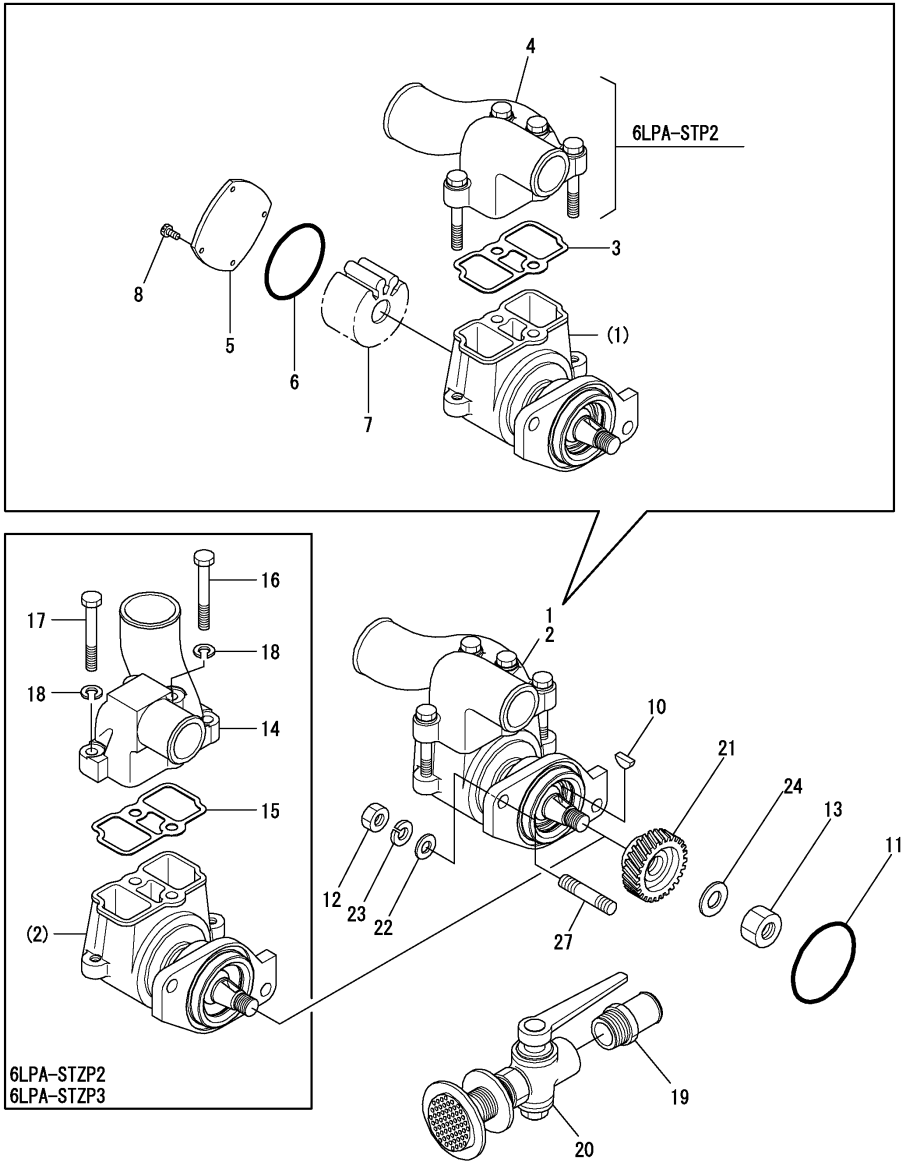

27. COOLING SEA WATER PUMP

(A)=6LPA-STP2 (D)=
(B)=6LPA-STZP2 (E)=
(C)=6LPA-STZP3 (F)=

	REF.	LEV.	PARTS NO.	DESCRIPTION	Q'TY (A)	(B)	(C)	(D)	(E)	(F)	I	R
I	1	1	119773-42500	PUMP ASSY, WATER	1							
I	2	1	119773-42650	PUMP ASSY,C.W.		1	1					
	3	2	119787-42570	GASKET	1							
	4	2	119773-42550	HOSE CONNECTION	1							
	5	2	129670-42520	COVER	1	1	1					
	6	2	119773-42570	O-RING	1	1	1					
	7	2	119773-42600	IMPELLER	1	1	1					
	8	2	119175-42620	SCREW	4	4	4					
	10	1	22522-050160	KEY 5X16	1	1	1					
	11	1	24321-000650	O-RING 1A G-65.0	1	1	1					
	12	1	26736-100002	NUT M10	2	2	2					
	13	1	26736-140002	NUT M14	1	1	1					
	14	1	119787-42550	BEND.CWS-P		1	1					
	15	1	119787-42570	GASKET		1	1					
	16	1	26203-080702	BOLT M 8X 70		2	2					
	17	1	26203-080602	BOLT M 8X 60		2	2					
	18	1	22213-080000	SPRING WASHER 8		4	4					
	19	1	43530-500610	JOINT (30A)	1	1	1					
	20	1	43662-030031	COCK ASSY, SEA WATER	1	1	1					
	21	1	119773-42520	GEAR	1	1	1					
	22	1	22117-100000	WASHER 10	2	2	2					
	23	1	22217-100000	SPRING WASHER 10	2	2	2					
	24	1	22117-140000	WASHER 14	1	1	1					
	27	1	119770-01210	BOLT,STUD	2	2	2					

N:Old $\xleftrightarrow[\text{No}]{\text{Yes}}$ New, Q:Old $\xleftrightarrow[\text{Yes}]{\text{No}}$ New, R:Old $\xleftrightarrow[\text{Yes}]{\text{Yes}}$ New, S:Old $\xleftrightarrow[\text{No}]{\text{No}}$ New, W:Add, Z:Discontinued, F:Interchangeable by set, K:Q'ty Change

(C)Copy Rights YANMAR CO.,LTD.

Fig.28. COOLING FRESH WATER PUMP

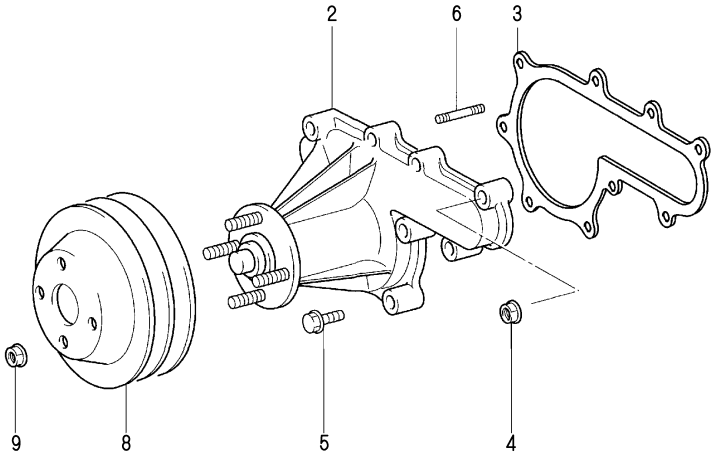

0CR10-G67600

28. COOLING FRESH WATER PUMP

(A)=6LPA-STP2 (D)=
(B)=6LPA-STZP2 (E)=
(C)=6LPA-STZP3 (F)=

REF.	LEV.	PARTS NO.	DESCRIPTION	Q'TY (A)	(B)	(C)	(D)	(E)	(F)	I	R
2	2	119770-00730	PUMP ASSY,WATER	1	1	1					
3	2	119770-00740	GASKET,WATER PUMP	1	1	1					
4	2	119770-90630	NUT	2	2	2					
5	2	119770-90800	BOLT,FLANGE	5	5	5					
6	2	119770-90810	BOLT,STUD	2	2	2					
8	2	119770-00750	PULLEY,FAN	1	1	1					
9	2	119770-91050	NUT	4	4	4					

N:Old $\xleftrightarrow[\text{No}]{\text{Yes}}$ New, Q:Old $\xleftrightarrow[\text{Yes}]{\text{No}}$ New, R:Old $\xleftrightarrow[\text{Yes}]{\text{Yes}}$ New, S:Old $\xleftrightarrow[\text{No}]{\text{No}}$ New, W:Add, Z:Discontinued, F:Interchangeable by set, K:Q'ty Change

(C)Copy Rights YANMAR CO.,LTD.

Fig.29. THERMOSTAT

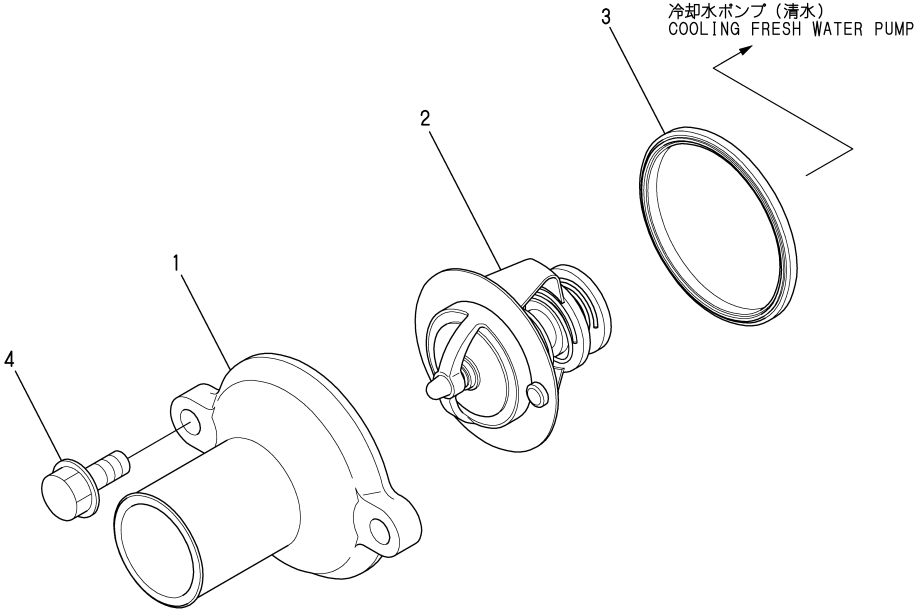

29. THERMOSTAT

(A)=6LPA-STP2 (D)=
(B)=6LPA-STZP2 (E)=
(C)=6LPA-STZP3 (F)=

REF.	LEV.	PARTS NO.	DESCRIPTION	Q'TY (A)	(B)	(C)	(D)	(E)	(F)	I	R
1	1	119773-49540	COVER,THERMOSTAT	1	1	1					
2	1	119773-49550	THERMOSTAT 70	1	1	1					
3	1	119773-49570	WASHER	1	1	1					
4	1	26106-080202	BOLT M 8X 20 PLATED	2	2	2					

N:Old ◄Yes/No► New, Q:Old ◄No/Yes► New, R:Old ◄Yes/Yes► New, S:Old ◄No/No► New, W:Add, Z:Discontinued, F:Interchangeable by set, K:Q'ty Change

(C)Copy Rights YANMAR CO.,LTD.

Fig.30. COOLING FRESH WATER COOLER

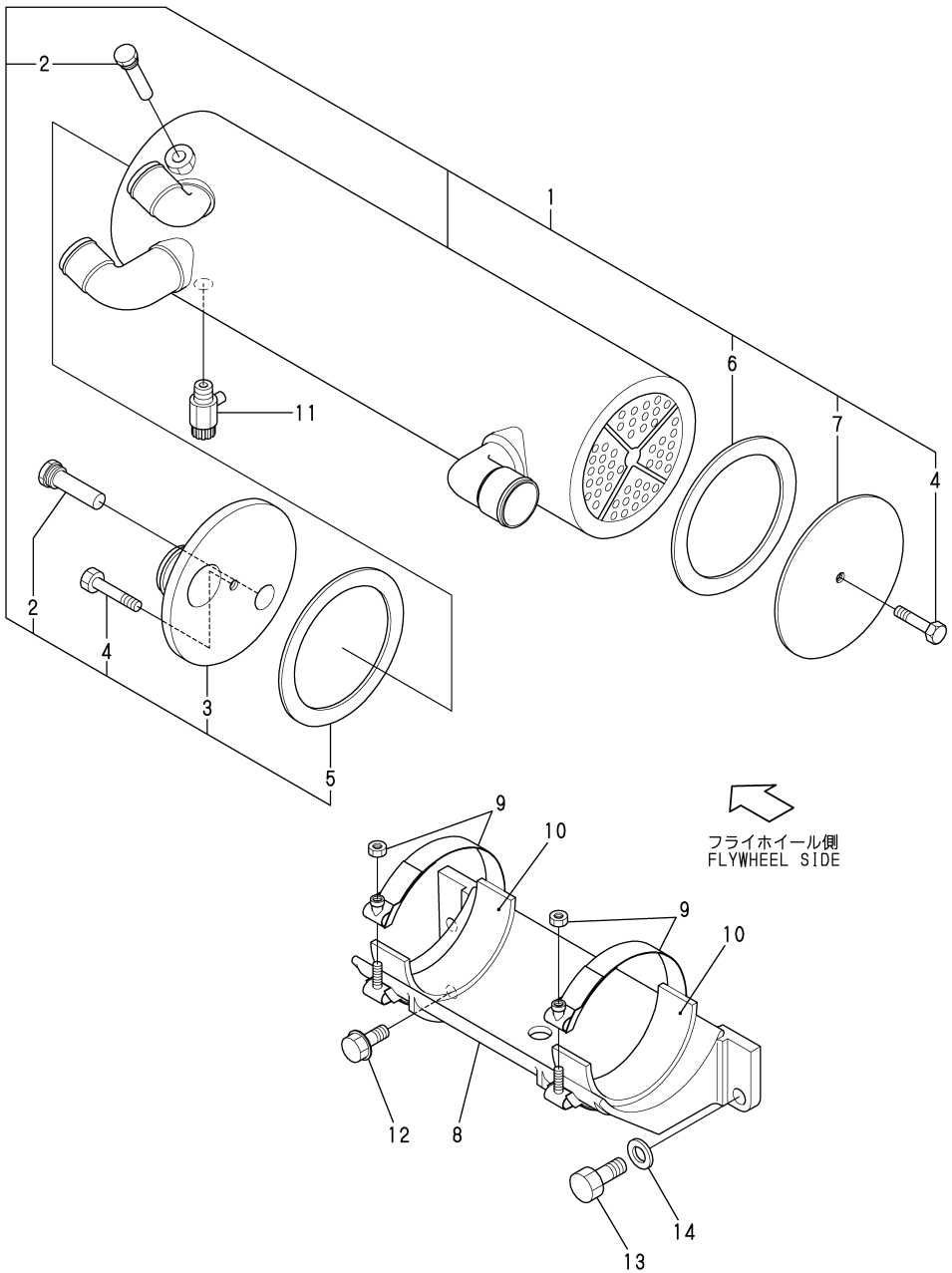

30. COOLING FRESH WATER COOLER

(A)=6LPA-STP2 (D)=
(B)=6LPA-STZP2 (E)=
(C)=6LPA-STZP3 (F)=

REF.	LEV.	PARTS NO.	DESCRIPTION	Q'TY (A)	(B)	(C)	(D)	(E)	(F)	I	R
1	1	119773-44011	HEAT EXCHANGER	1	1	1					
2	2	119574-44150	ZINC, ANTI-CORROSIVE	2	2	2					
3	2	119773-44051	COVER R	1	1	1					
4	2	119574-44180	BOLT,UNC 3/8	2	2	2					
5	2	119773-44071	GASKET R	1	1	1					
6	2	119773-44080	GASKET F	1	1	1					
7	2	119773-44060	COVER F	1	1	1					
8	1	119773-44150	BRACKET	1	1	1					
9	1	119574-44600	CLAMP,T-BOLT	2	2	2					
10	1	119574-44621	RUBBER SEAT	2	2	2					
11	1	119620-49290	COCK ASSY 1/4	1	1	1					
12	1	26136-100252	BOLT M10X25	2	2	2					
13	1	26156-120302	BOLT M12X 30 PLATED	1	1	1					
14	1	22117-120000	WASHER 12	1	1	1					

N:Old $\overset{\text{Yes}}{\underset{\text{No}}{\leftrightarrows}}$ New, Q:Old $\overset{\text{No}}{\underset{\text{Yes}}{\leftrightarrows}}$ New, R:Old $\overset{\text{Yes}}{\underset{\text{Yes}}{\leftrightarrows}}$ New, S:Old $\overset{\text{No}}{\underset{\text{No}}{\leftrightarrows}}$ New, W:Add, Z:Discontinued, F:Interchangeable by set, K:Q'ty Change

(C)Copy Rights YANMAR CO.,LTD.

Fig.31. C.S.W.PIPE(6LPA-STP2)

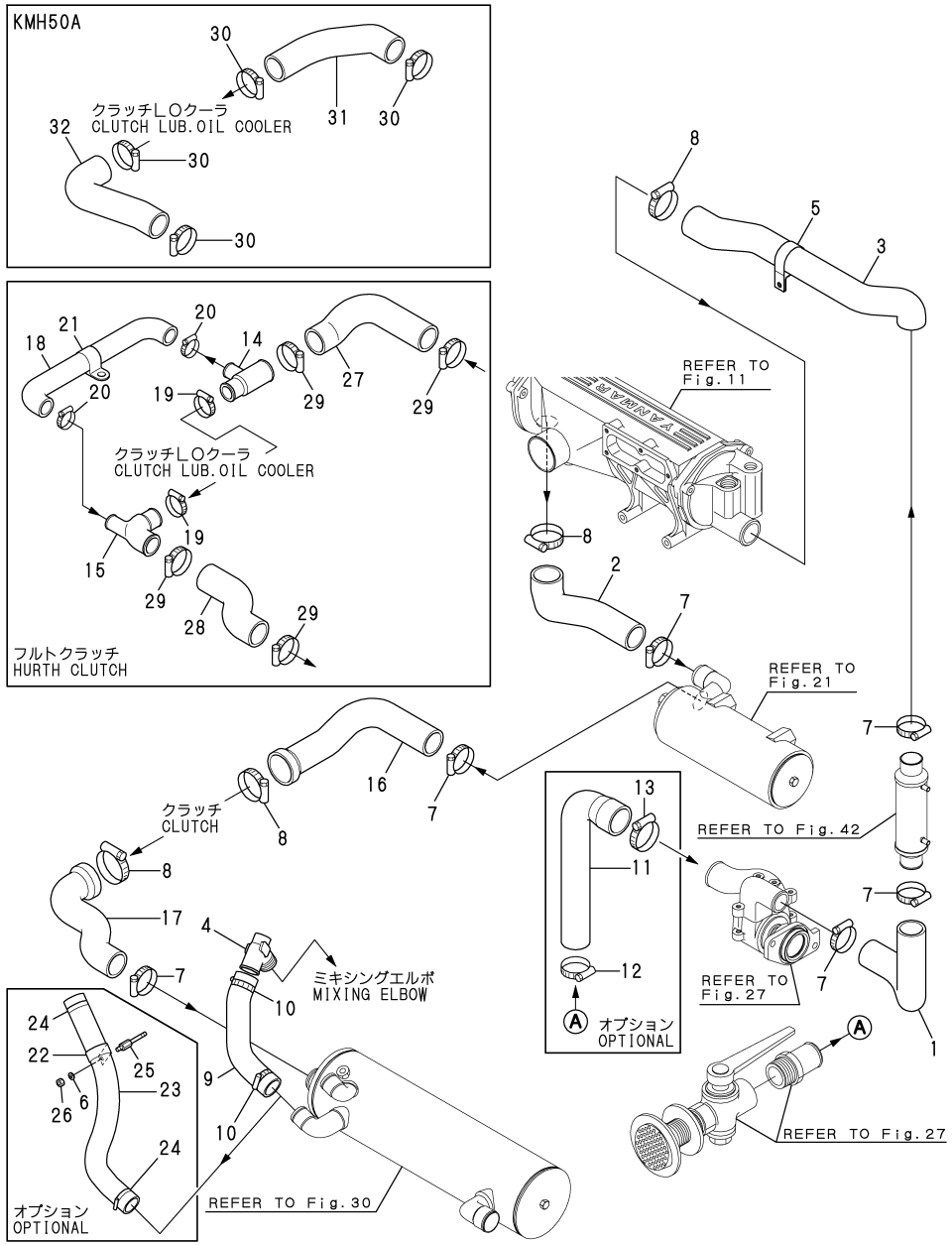

Remarks
(1)HURTH CLUTCH LUB.OIL COOLER

0CR10-G67600 31. C.S.W.PIPE(6LPA-STP2)

(A)=6LPA-STP2 (D)=
(B)=6LPA-STZP2 (E)=
(C)=6LPA-STZP3 (F)=

REF.	LEV.	PARTS NO.	DESCRIPTION	Q'TY (A)	(B)	(C)	(D)	(E)	(F)	I	R
1	1	119775-49010	HOSE,CWP OUT	1							
2	1	119775-49060	HOSE,OIL COOLER IN	1							
3	1	119775-49040	HOSE,FO COOLER OUT	1							
4	1	119775-48640	BEND,90 ELBOW	1							
5	1	119593-49080	CLAMP	1							
6	1	22117-080000	WASHER 8	1							
7	1	119172-48480	CLAMP 48	6							
8	1	119172-48540	CLAMP 54	4							
9	1	119775-49750	HOSE,CEF COOLER OUT	1							
10	1	119172-48480	CLAMP 48	2							
11	1	119775-49160	HOSE(CWS-P IN	1							
12	1	119172-48540	CLAMP 54	1							
13	1	119172-48540	CLAMP 54	1							
14	1	119775-49360	BEND	1							1
15	1	119775-49370	BEND	1							1
16	1	119775-49090	HOSE,LO COOLER OUT	1							
17	1	119775-49080	HOSE,CLUTCH OUT	1							
18	1	119773-49090	HOSE,CLUTCH BYPASS	1							1
19	1	119172-48480	CLAMP 48	2							1
20	1	119172-48410	CLAMP 41	2							1
21	1	23297-350121	RETAINER	2							
22	1	119593-49080	CLAMP	1							
23	1	119778-49780	HOSE	1							
24	1	119172-48540	CLAMP 54	2							
25	1	119778-49800	BOLT	1							
26	1	26716-080002	NUT M 8	1							
27	1	119775-49020	HOSE,LO COOLER OUT	1							1
28	1	119773-49030	HOSE,CLUTCH OUT	1							1
29	1	119172-48480	CLAMP 48	4							1
30	1	119172-48480	CLAMP 48	4							
31	1	119775-49170	HOSE, CLUTCH IN	1							
32	1	119773-49180	HOSE, CLUTCH OUT	1							

N:Old $\overset{\text{Yes}}{\underset{\text{No}}{\leftrightarrow}}$ New, Q:Old $\overset{\text{No}}{\underset{\text{Yes}}{\leftrightarrow}}$ New, R:Old $\overset{\text{Yes}}{\underset{\text{Yes}}{\leftrightarrow}}$ New, S:Old $\overset{\text{No}}{\underset{\text{No}}{\leftrightarrow}}$ New, W:Add, Z:Discontinued, F:Interchangeable by set, K:Q'ty Change

(C)Copy Rights YANMAR CO.,LTD.

Fig.32. C.S.W.PIPE(6LPA-STZP2/3)

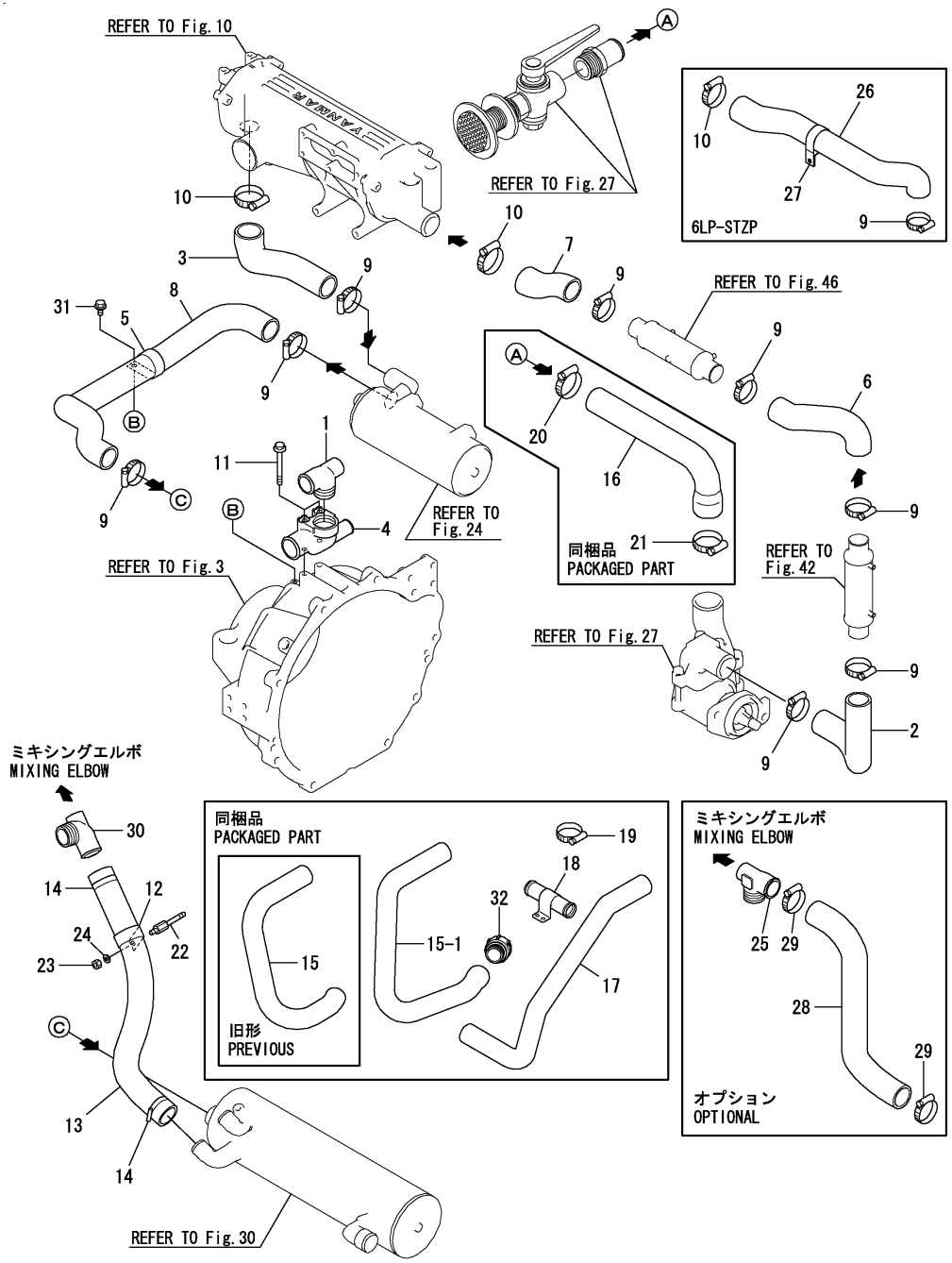

32. C.S.W.PIPE(6LPA-STZP2/3)

(A)=6LPA-STP2 (D)=
(B)=6LPA-STZP2 (E)=
(C)=6LPA-STZP3 (F)=

	REF.	LEV.	PARTS NO.	DESCRIPTION	Q'TY (A)	(B)	(C)	(D)	(E)	(F)	I	R
	1	1	119775-48640	BEND,90 ELBOW		1	1					
	2	1	119775-49010	HOSE,CWP OUT		1	1					
	3	1	119775-49060	HOSE,OIL COOLER IN		1	1					
	4	1	119779-49050	BEND,TRAIANGLE		1	1					
	5	1	119593-49080	CLAMP		1	1					
	6	1	119779-49090	CWS-T,P.S.COOLER IN		1						
	7	1	119779-49100	CWS-T(POWER STEARING		1						
	8	1	119779-49590	CWS-T,LO COOLER OUT		1	1					
	9	1	119172-48480	CLAMP 48		8	6					
	10	1	119172-48540	CLAMP 54		2	2					
	11	1	26106-100802	BOLT M10X 80 PLATED		2	2					
	12	1	119593-49080	CLAMP		1	1					
	13	1	119778-49780	HOSE		1	1					
	14	1	119172-48540	CLAMP 54		2	2					
	15	1	119779-49150	HOSE,DRIVE OUT		1	1					
I	15-1	1	119779-49160	HOSE,DRIVE OUT		1	1				S	
			(B=*2008.12)	(C=*2008.12)								
	16	1	119775-49160	HOSE(CWS-P IN		1	1					
	17	1	119779-49170	HOSE,DRIVE OUT		1	1					
	18	1	119778-49200	TUBE,DRIVE		1	1					
	19	1	119172-48410	CLAMP 41		4	4					
	20	1	119172-48480	CLAMP 48		1	1					
	21	1	119172-48540	CLAMP 54		1	1					
	22	1	119778-49800	BOLT		1	1					
	23	1	26716-080002	NUT M 8		1	1					
	24	1	22117-080000	WASHER 8		1	1					
	25	1	119779-48620	BEND,90 ELBOW		1	1					
	26	1	119775-49040	HOSE,FO COOLER OUT			1					
	27	1	119593-49080	CLAMP			1					
	28	1	119779-49040	HOSE,MIX.IN		1	1					
	29	1	119172-48480	CLAMP 48		2	2					
	30	1	119775-48640	BEND,90 ELBOW		1	1					
I	31	1	26106-080182	BOLT M 8X 18 PLATED		1	1				W	
			(B=FROM 1ST)	(C=FROM 1ST)								
I	32	1	120650-42630	JOINT		1	1				W	
			(B=*2008.12)	(C=*2008.12)								

N:Old $\overset{\text{Yes}}{\underset{\text{No}}{\leftrightarrow}}$ New, Q:Old $\overset{\text{No}}{\underset{\text{Yes}}{\leftrightarrow}}$ New, R:Old $\overset{\text{Yes}}{\underset{\text{Yes}}{\leftrightarrow}}$ New, S:Old $\overset{\text{No}}{\underset{\text{No}}{\leftrightarrow}}$ New, W:Add, Z:Discontinued, F:Interchangeable by set, K:Q'ty Change

(C)Copy Rights YANMAR CO.,LTD.

Fig.33. COOLING FRESH WATER PIPE

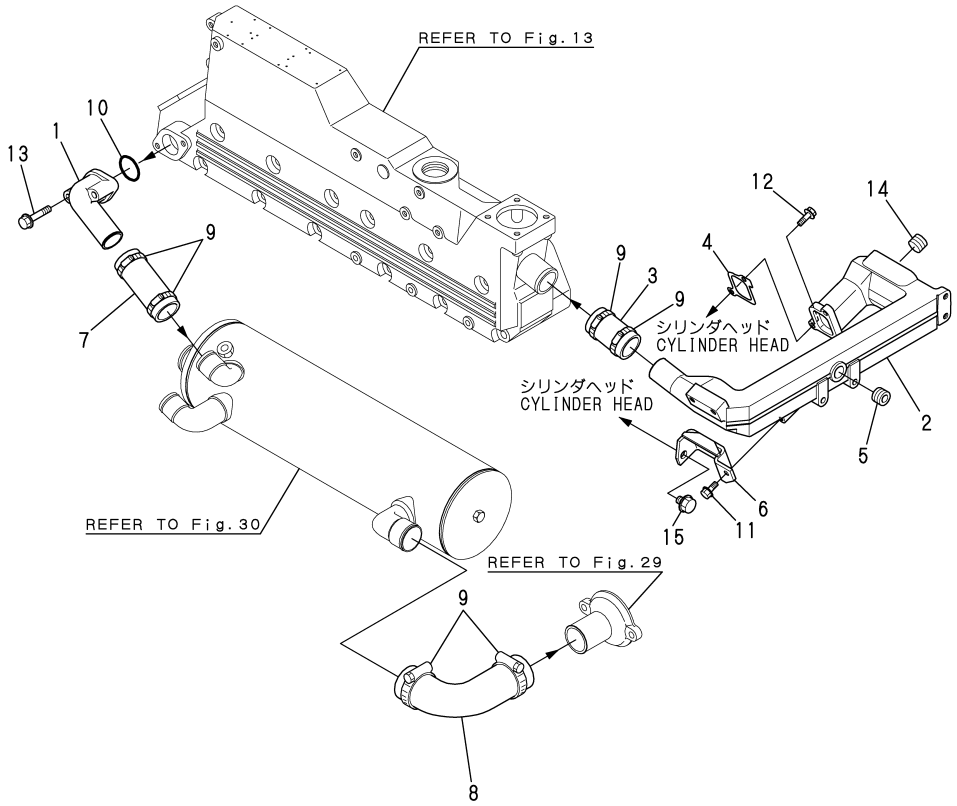

0CR10-G67600

33. COOLING FRESH WATER PIPE

(A)=6LPA-STP2 (D)=
(B)=6LPA-STZP2 (E)=
(C)=6LPA-STZP3 (F)=

REF.	LEV.	PARTS NO.	DESCRIPTION	Q'TY (A)	(B)	(C)	(D)	(E)	(F)	I	R
1	1	119773-44450	BEND,FRESH WATER	1	1	1					
2	1	119773-49110	PIPE,FRESH WATER	1	1	1					
3	1	119775-49120	HOSE,EXH.IN	1	1	1					
4	1	119773-49140	GASKET	1	1	1					
5	1	23871-030000	PLUG PT3/8,SCREW	1	1	1					
6	1	119775-49150	BRACKET,CWF-PIPE	1	1	1					
7	1	119773-49200	HOSE,EXH.MANFOLD	1	1	1					
8	1	119775-49220	HOSE,THERMO IN	1	1	1					
9	1	119172-48480	CLAMP 48	6	6	6					
10	1	24321-000350	O-RING 1A G-35.0	1	1	1					
11	1	26106-080162	BOLT M 8X 16 PLATED	1	1	1					
12	1	26106-080202	BOLT M 8X 20 PLATED	2	2	2					
13	1	26106-080502	BOLT M 8X 50 PLATED	2	2	2					
14	1	23876-030000	PLUG PT3/8,SCREW	1	1	1					
15	1	26136-100252	BOLT M10X25	1	1	1					

N:Old ◄Yes/No► New, Q:Old ◄No/Yes► New, R:Old ◄Yes/Yes► New, S:Old ◄No/No► New, W:Add, Z:Discontinued, F:Interchangeable by set, K:Q'ty Change

(C)Copy Rights YANMAR CO.,LTD.

Fig.34. C.F.W.WATER PIPE(TURBOCHARGER)

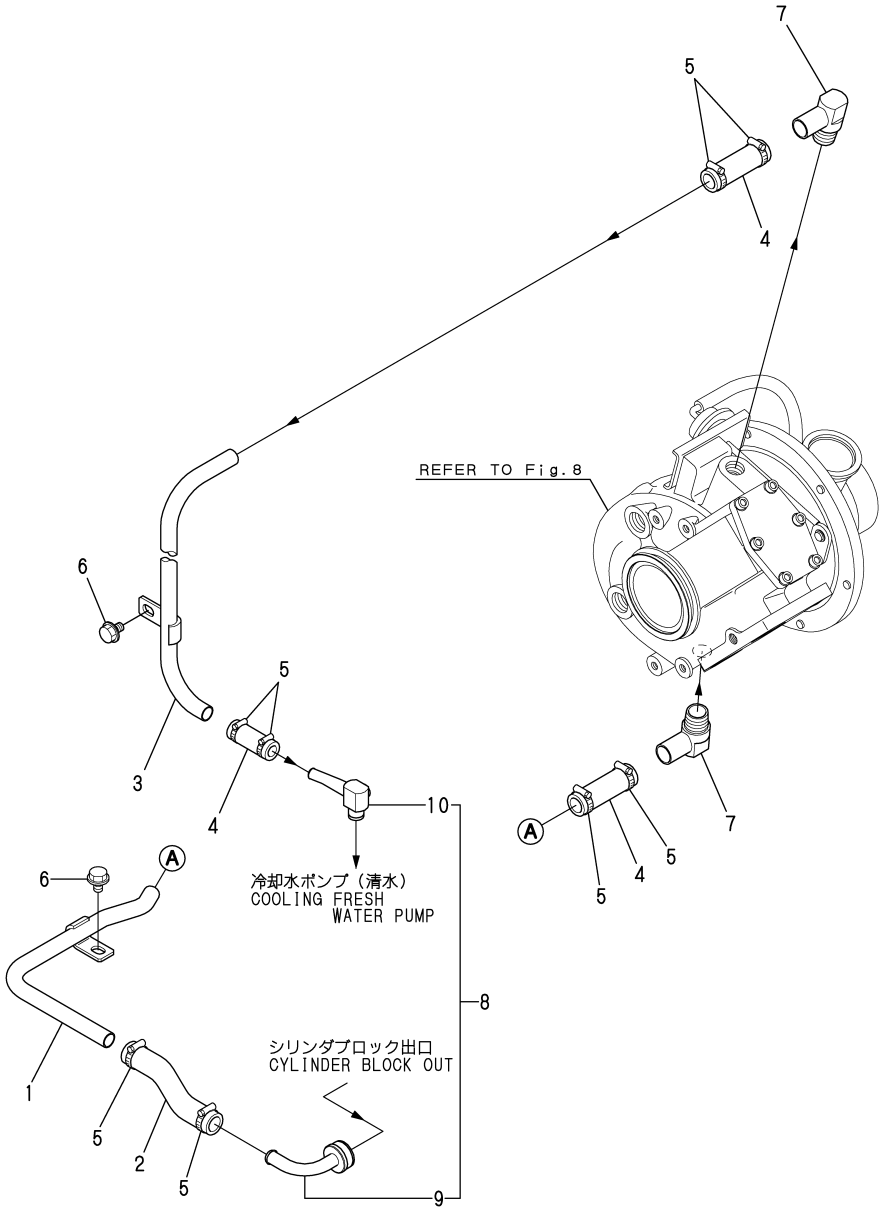

0CR10-G67600

34. C.F.W.WATER PIPE(TURBOCHARGER)

(A)=6LPA-STP2 (D)=
(B)=6LPA-STZP2 (E)=
(C)=6LPA-STZP3 (F)=

REF.	LEV.	PARTS NO.	DESCRIPTION	Q'TY (A)	(B)	(C)	(D)	(E)	(F)	I	R
1	1	119773-49250	HOSE,TURBO.IN	1	1	1					
2	1	119775-49260	HOSE,T/C IN	1	1	1					
3	1	119773-49280	HOSE,TURBO.OUT	1	1	1					
4	1	119773-49350	JOINT	3	3	3					
5	1	119172-48250	CLAMP 25	8	8	8					
6	1	26106-080122	BOLT M 8X 12 PLATED	2	2	2					
7	1	119187-49321	JOINT	2	2	2					
8	1	119773-49990	CWF-T(YD ASSY	1	1	1					
9	2	119773-49300	JOINT,BLOCK OUT	1	1	1					
10	2	119773-49320	JOINT,BLOCK IN	1	1	1					

N:Old $\frac{\text{Yes}}{\text{No}}$ New, Q:Old $\frac{\text{No}}{\text{Yes}}$ New, R:Old $\frac{\text{Yes}}{\text{Yes}}$ New, S:Old $\frac{\text{No}}{\text{No}}$ New, W:Add, Z:Discontinued, F:Interchangeable by set, K:Q'ty Change

(C)Copy Rights YANMAR CO.,LTD.

Fig.35. BILGE PUMP(STD,OPTIONAL)

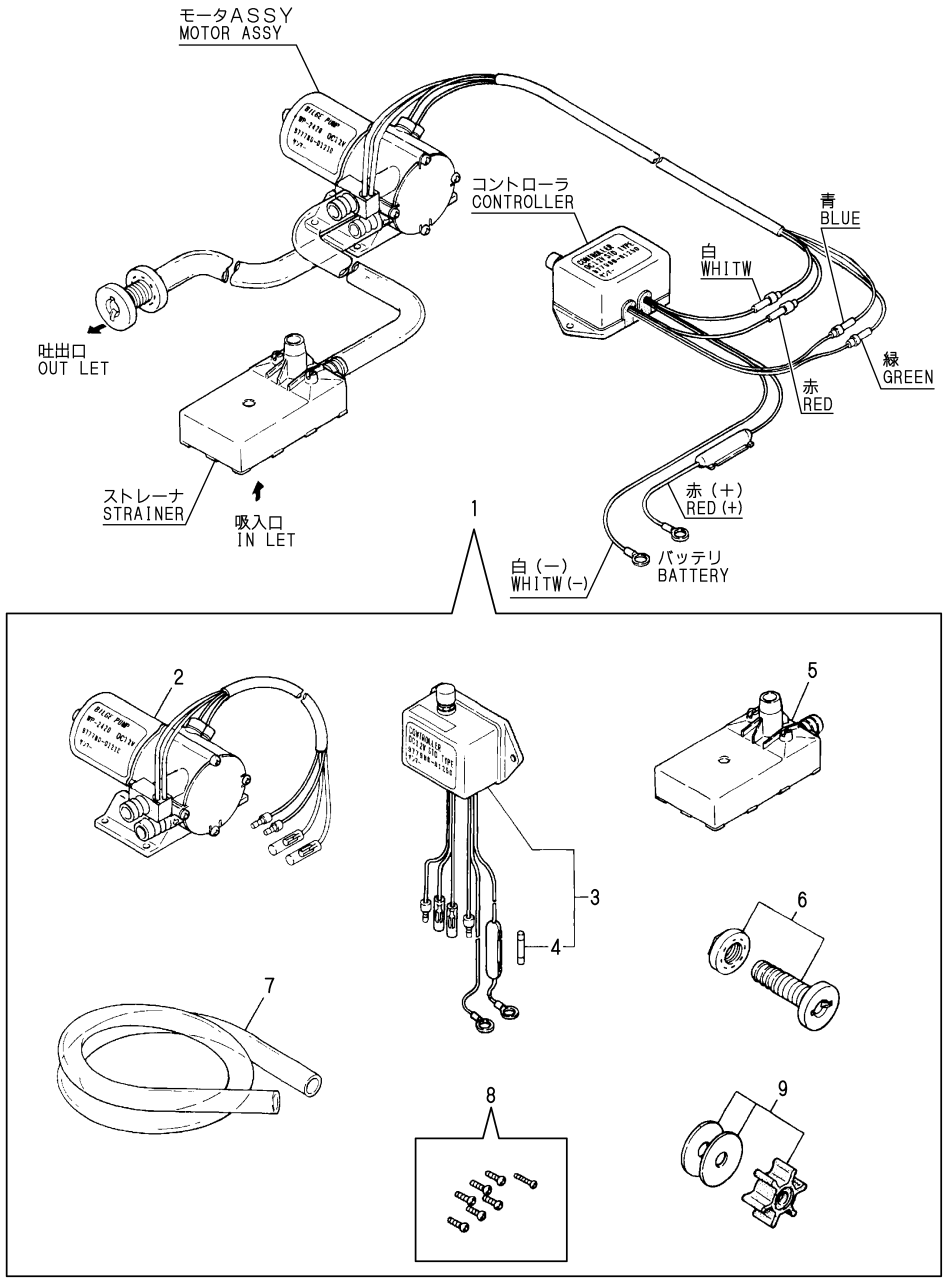

35. BILGE PUMP(STD,OPTIONAL)

(A)=6LPA-STP2 (D)=
(B)=6LPA-STZP2 (E)=
(C)=6LPA-STZP3 (F)=

REF.	LEV.	PARTS NO.	DESCRIPTION	Q'TY (A)	(B)	(C)	(D)	(E)	(F)	I	R
1	1	977780-01210	PUMP(12V).BILGE	1	1	1					
2	2	977780-01230	MOTOR ASSY(BILG PUMP	1	1	1					
3	2	977780-01250	CONTROLLER	1	1	1					
4	3	X8636008003	FUSE	1	1	1					
5	2	X179100021X	STRAINER	1	1	1					
6	2	X179100100X	PIPE ASSY	1	1	1					
7	2	X0044021509	HOSE A	1	1	1					
8	2	X199903800X	SCREW KIT	1	1	1					
9	2	977780-03000	INPELLER	1	1	1					

N:Old ←Yes/No→ New, Q:Old ←No/Yes→ New, R:Old ←Yes/Yes→ New, S:Old ←No/No→ New, W:Add, Z:Discontinued, F:Interchangeable by set, K:Q'ty Change

(C)Copy Rights YANMAR CO.,LTD.

Fig.36. BILGE PUMP(DX,OPTIONAL)

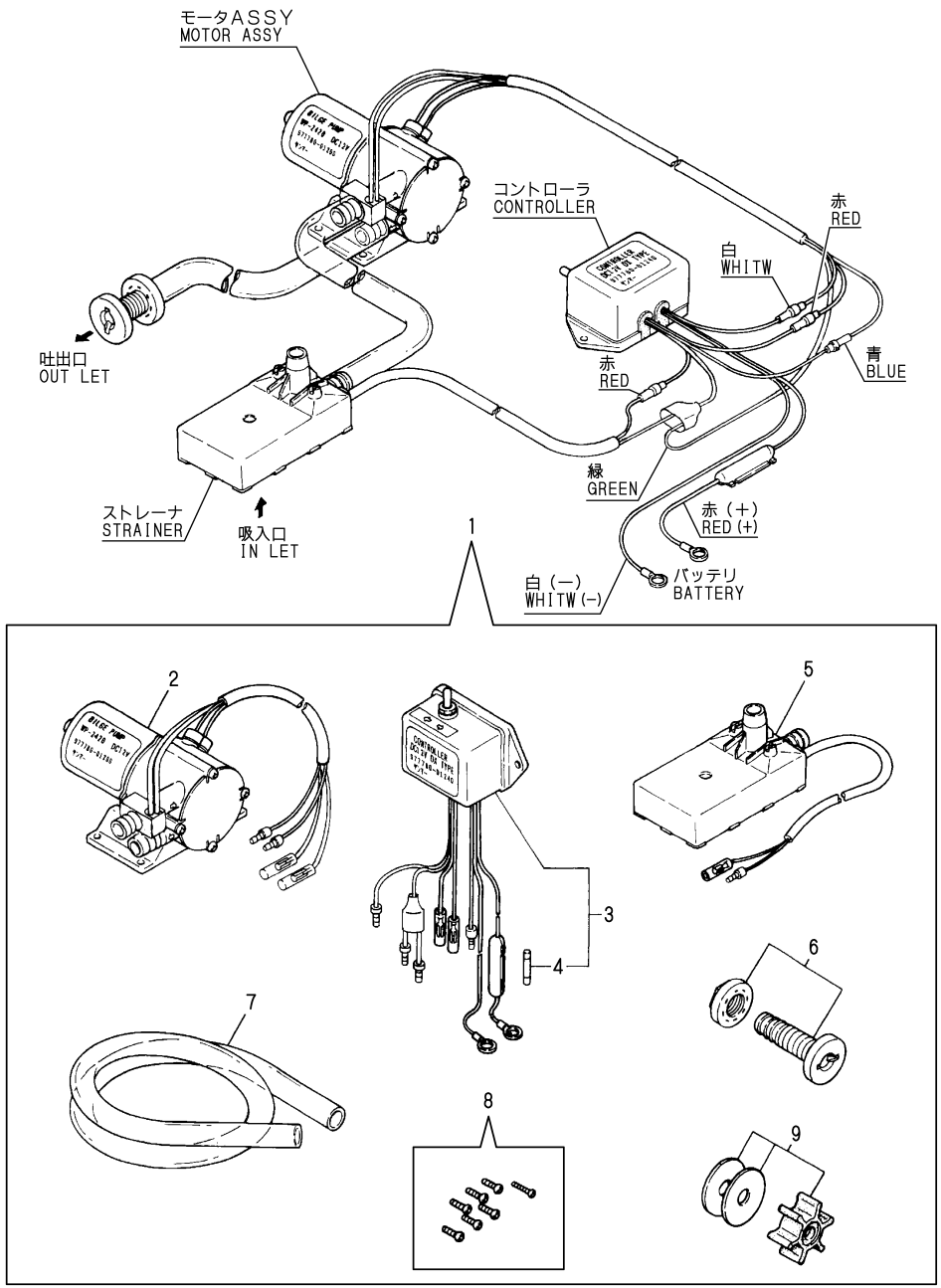

36. BILGE PUMP(DX,OPTIONAL)

(A)=6LPA-STP2 (D)=
(B)=6LPA-STZP2 (E)=
(C)=6LPA-STZP3 (F)=

REF.	LEV.	PARTS NO.	DESCRIPTION	Q'TY (A)	(B)	(C)	(D)	(E)	(F)	I	R
1	1	977780-01200	PUMP(12V).BILGE	1	1	1					
2	2	977780-01230	MOTOR ASSY(BILG PUMP	1	1	1					
3	2	977780-01240	CONTROLLER	1	1	1					
4	3	X8636008003	FUSE	1	1	1					
5	2	X179100011X	STRAINER	1	1	1					
6	2	X179100100X	PIPE ASSY	1	1	1					
7	2	X0044021509	HOSE A	1	1	1					
8	2	X199903800X	SCREW KIT	1	1	1					
9	2	977780-03000	INPELLER	1	1	1					

N:Old ←Yes/No→ New, Q:Old ←No/Yes→ New, R:Old ←Yes/Yes→ New, S:Old ←No/No→ New, W:Add, Z:Discontinued, F:Interchangeable by set, K:Q'ty Change

(C)Copy Rights YANMAR CO.,LTD.

Fig.37. FUEL INJECTION PUMP

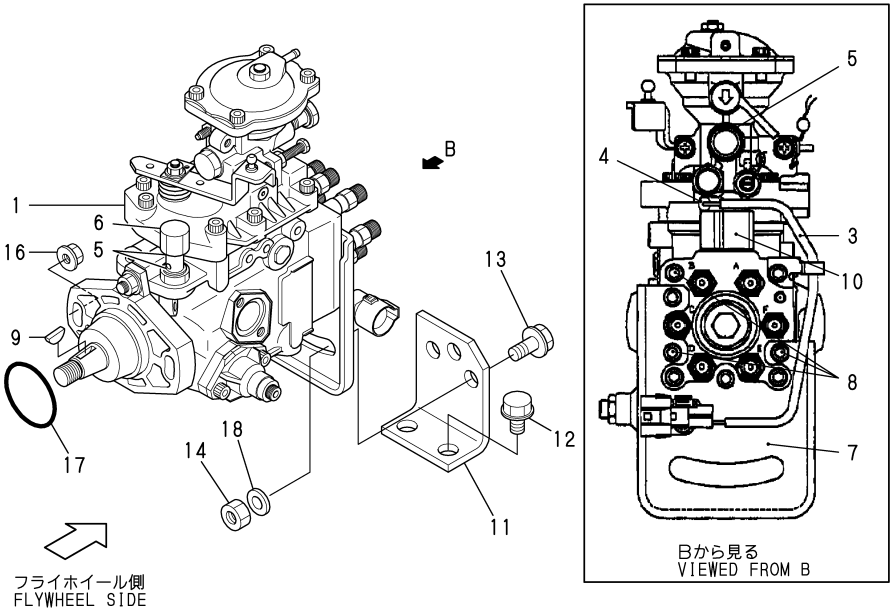

37. FUEL INJECTION PUMP

(A)=6LPA-STP2 (D)=
(B)=6LPA-STZP2 (E)=
(C)=6LPA-STZP3 (F)=

REF.	LEV.	PARTS NO.	DESCRIPTION	Q'TY (A)	(B)	(C)	(D)	(E)	(F)	I	R
1	1	119775-51980	PUMP ASSY,FUEL INJ.	1	1	1					
3	2	119773-51910	WIRE	1	1	1					
4	2	119773-51920	NUT	1	1	1					
5	2	119773-51930	WASHER	4	4	4					
6	2	119773-51940	NUT, CAP	1	1	1					
7	2	119775-51950	BRACKET	1	1	1					
8	2	119773-51960	BOLT	4	4	4					
9	2	119773-51970	KEY	1	1	1					
10	2	119773-51980	SOLENOID,FUEL CUT	1	1	1					
11	1	119773-51810	BRACKET, FOP	1	1	1					
12	1	26106-120202	BOLT M12X 20 PLATED	2	2	2					
13	1	26106-120252	BOLT M12X 25 PLATED	2	2	2					
14	1	26716-120002	NUT 12	2	2	2					
16	1	119770-90890	NUT	2	2	2					
17	1	119770-90900	O-RING	1	1	1					
18	1	22117-120000	WASHER 12	2	2	2					

N:Old $\frac{\text{Yes}}{\text{No}}$ New, Q:Old $\frac{\text{No}}{\text{Yes}}$ New, R:Old $\frac{\text{Yes}}{\text{Yes}}$ New, S:Old $\frac{\text{No}}{\text{No}}$ New, W:Add, Z:Discontinued, F:Interchangeable by set, K:Q'ty Change

(C)Copy Rights YANMAR CO.,LTD.

Fig.38. FUEL INJECTION VALVE

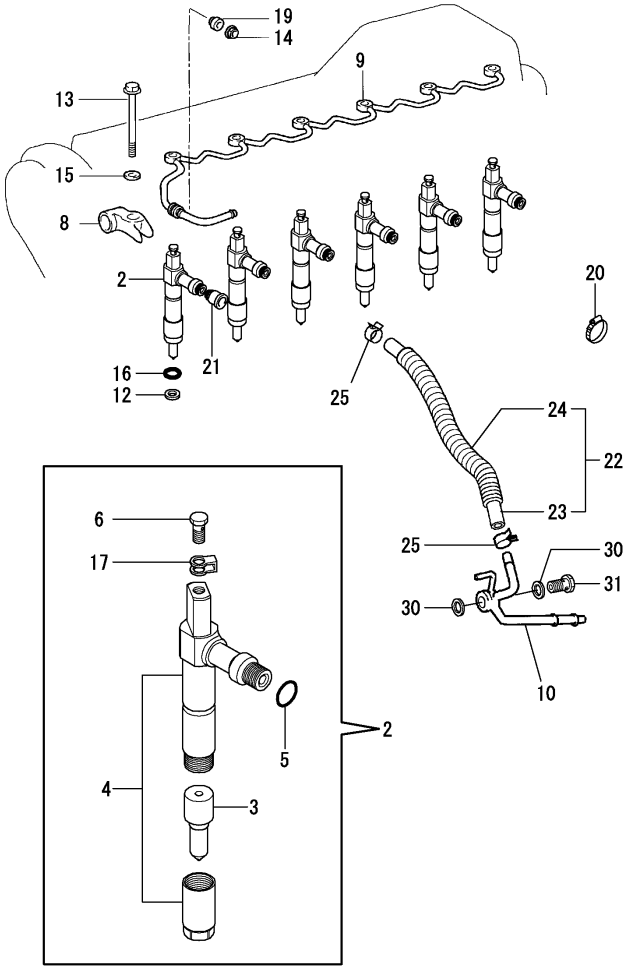

38. FUEL INJECTION VALVE

(A)=6LPA-STP2 (D)=
(B)=6LPA-STZP2 (E)=
(C)=6LPA-STZP3 (F)=

	REF.	LEV.	PARTS NO.	DESCRIPTION	Q'TY (A)	(B)	(C)	(D)	(E)	(F)	I	R
	2	2	119775-53180	VALVE ASSY,FUEL INJ.	6	6	6					
	2-1	2	119775-53181	VALVE ASSY,INJECTION	6	6	6				N	
		(A=*2007.04)	(B=*2007.04)	(C=*2007.04)								
I	3	3	119775-53280	NOZZLE ASSY	6	6	6					
I	4	3	119775-53290	HOLDER ASSY,NOZZLE	6	6	6					
I	4-1	3	119775-53291	NOZZLE HOLDER ASSY	6	6	6				S	
		(A=*2007.04)	(B=*2007.04)	(C=*2007.04)								
	5	3	X0932490090	O-RING	6	6	6					
	6	3	119775-53920	SCREW(HOLLOW	6	6	6					
	8	2	119771-00351		6	6	6					
	9	2	119771-00360	PIPE,NOZZLE LEAKAGE	1	1	1					
	10	2	119771-00370	PIPE,NOZZLE LEAKAGE	1	1	1					
	12	2	119770-00781	SEAT,INJECTION NOZZ	6	6	6					
	13	2	119771-90290	BOLT,WASHER BASED	6	6	6					
	14	2	119771-90300	NUT	1	1	1					
	15	2	119771-90310	WASHER	6	6	6					
	16	2	119771-90320	O-RING	6	6	6					
	17	2	119771-90330	GASKET	6	6	6					
	19	2	119770-90670	GASKET	1	1	1					
	20	2	119770-90930	CLIP	4	4	4					
	21	2	119771-00340	SEAL,NOZZLE HOLDER	6	6	6					
	22	1	119775-59540	PIPE,FUEL	1	1	1					
	23	2	119775-59551	PIPE,FUEL	1	1	1					
	24	2	119775-59560	TUBE	1	1	1					
	25	1	119172-48130	BAND	2	2	2					
	30	1	119773-51930	WASHER	2	2	2					
	31	1	X0960200180	SCREW	1	1	1					

N:Old $\xleftrightarrow[\text{No}]{\text{Yes}}$ New, Q:Old $\xleftrightarrow[\text{Yes}]{\text{No}}$ New, R:Old $\xleftrightarrow[\text{Yes}]{\text{Yes}}$ New, S:Old $\xleftrightarrow[\text{No}]{\text{No}}$ New, W:Add, Z:Discontinued, F:Interchangeable by set, K:Q'ty Change

(C)Copy Rights YANMAR CO.,LTD.

Fig.39. FUEL INJECTION PIPE

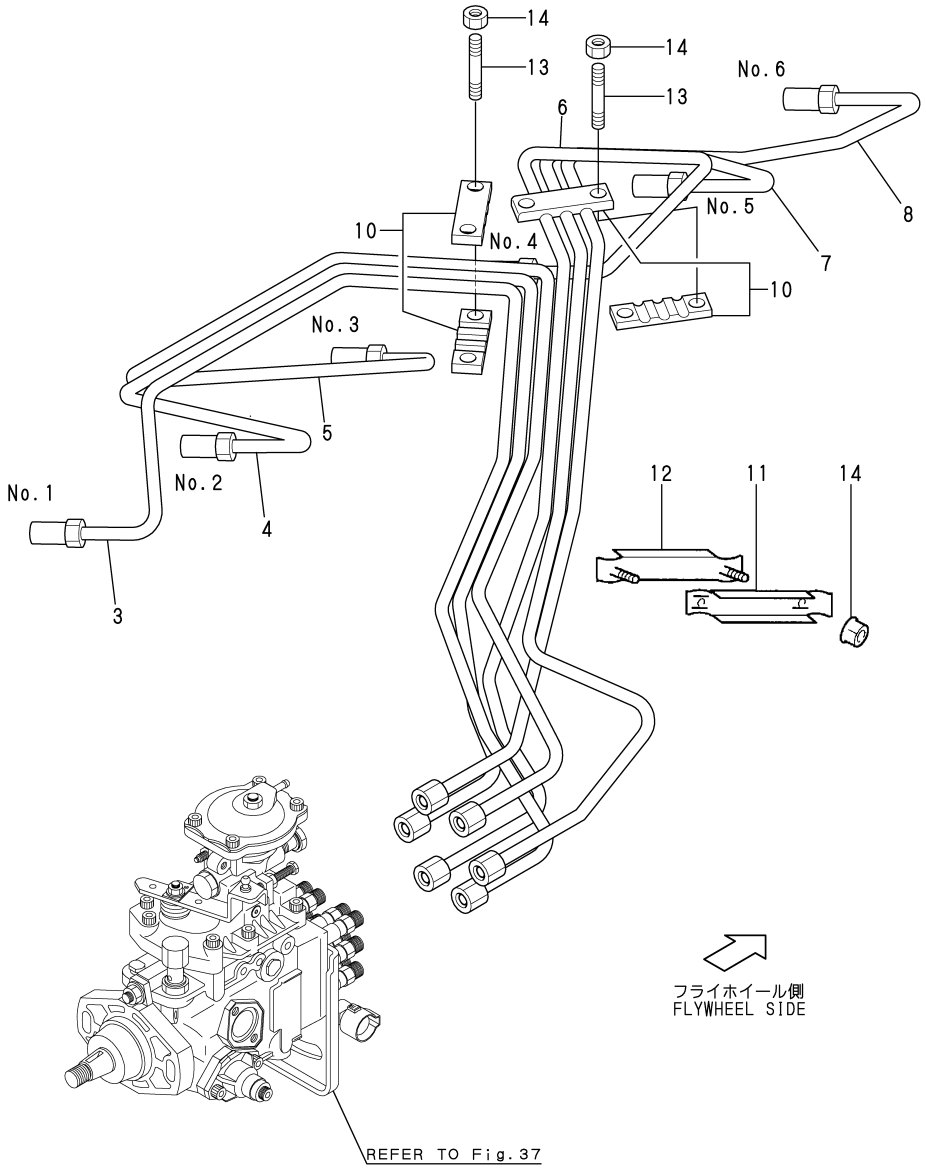

39. FUEL INJECTION PIPE

(A)=6LPA-STP2 (D)=
(B)=6LPA-STZP2 (E)=
(C)=6LPA-STZP3 (F)=

REF.	LEV.	PARTS NO.	DESCRIPTION	Q'TY (A)	(B)	(C)	(D)	(E)	(F)	I	R
3	2	119775-59803	PIPE,FUEL INJECTION	1	1	1					
3-1	2	119775-59310	PIPE,FUEL INJECTION	1	1	1				N	
	(A=*2007.02)	(B=*2007.02)	(C=*2007.02)								
4	2	119775-59813	PIPE,FUEL INJECTION	1	1	1					
4-1	2	119775-59320	PIPE,FUEL INJECTION	1	1	1				N	
	(A=*2007.02)	(B=*2007.02)	(C=*2007.02)								
5	2	119775-59823	PIPE,FUEL INJECTION	1	1	1					
5-1	2	119775-59330	PIPE,FUEL INJECTION	1	1	1				N	
	(A=*2007.02)	(B=*2007.02)	(C=*2007.02)								
6	2	119775-59833	PIPE,FUEL INJECTION	1	1	1					
6-1	2	119775-59340	PIPE,FUEL INJECTION	1	1	1				N	
	(A=*2007.02)	(B=*2007.02)	(C=*2007.02)								
7	2	119775-59843	PIPE,FUEL INJECTION	1	1	1					
7-1	2	119775-59350	PIPE,FUEL INJECTION	1	1	1				N	
	(A=*2007.02)	(B=*2007.02)	(C=*2007.02)								
8	2	119775-59853	PIPE,FUEL INJECTION	1	1	1					
8-1	2	119775-59360	PIPE,FUEL INJECTION	1	1	1				N	
	(A=*2007.02)	(B=*2007.02)	(C=*2007.02)								
10	2	119771-00390	CLAMP.INJECTION PIPE	2	2	2					
11	2	119770-00910	CLAMP,INJECTION PIPE	1	1	1					
12	2	119770-00920	CLAMP,INJECTION PIPE	1	1	1					
13	2	119771-90340	BOLT,STUD	4	4	4					
14	2	119770-90960	NUT	6	6	6					

N:Old $\frac{\text{Yes}}{\text{No}}$ New, Q:Old $\frac{\text{No}}{\text{Yes}}$ New, R:Old $\frac{\text{Yes}}{\text{Yes}}$ New, S:Old $\frac{\text{No}}{\text{No}}$ New, W:Add, Z:Discontinued, F:Interchangeable by set, K:Q'ty Change

(C)Copy Rights YANMAR CO.,LTD.

Fig.40. FUEL PIPE

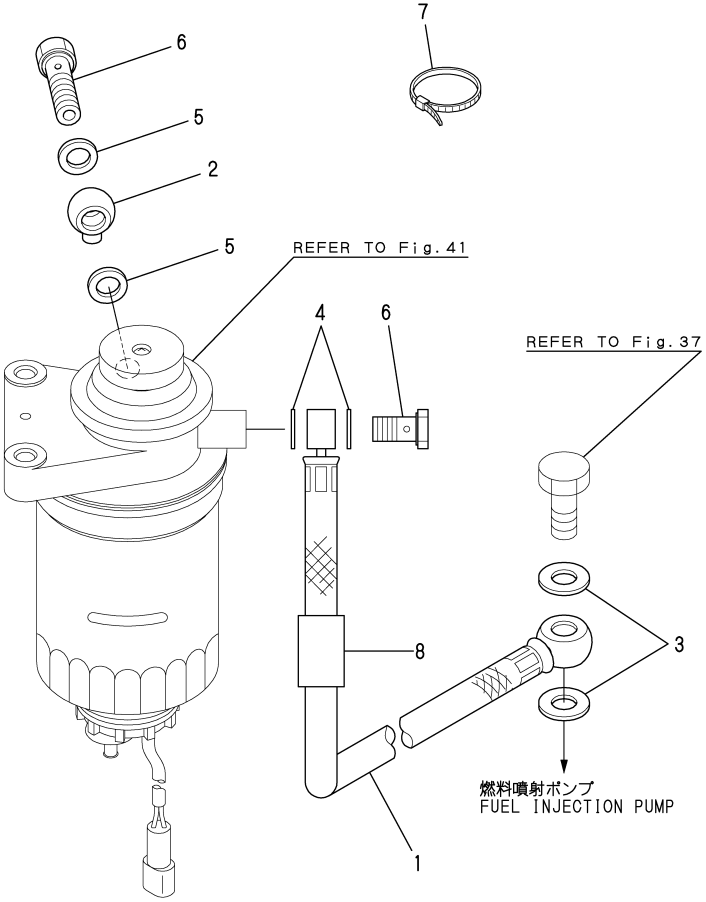

40. FUEL PIPE

(A)=6LPA-STP2 (D)=
(B)=6LPA-STZP2 (E)=
(C)=6LPA-STZP3 (F)=

REF.	LEV.	PARTS NO.	DESCRIPTION	Q'TY (A)	(B)	(C)	(D)	(E)	(F)	I	R
1	1	119773-59101	PIPE, FUEL	1	1	1					
2	1	121855-59880	JOINT	1	1	1					
3	1	22190-120002	SEAL WASHER 12	2	2	2					
4	1	22190-140002	SEAL WASHER 14S	2	2	2					
5	1	22190-140002	SEAL WASHER 14S	2	2	2					
6	1	23857-080000	JOINT BOLT 8,PIPE	2	2	2					
7	1	121750-59890	CLAMP 140	1	1	1					
8	1	119778-26670	PROTECTOR	1	1	1					

N:Old $\xleftrightarrow[\text{No}]{\text{Yes}}$ New, Q:Old $\xleftrightarrow[\text{Yes}]{\text{No}}$ New, R:Old $\xleftrightarrow[\text{Yes}]{\text{Yes}}$ New, S:Old $\xleftrightarrow[\text{No}]{\text{No}}$ New, W:Add, Z:Discontinued, F:Interchangeable by set, K:Q'ty Change

(C)Copy Rights YANMAR CO.,LTD.

Fig.41. FUEL STRAINER

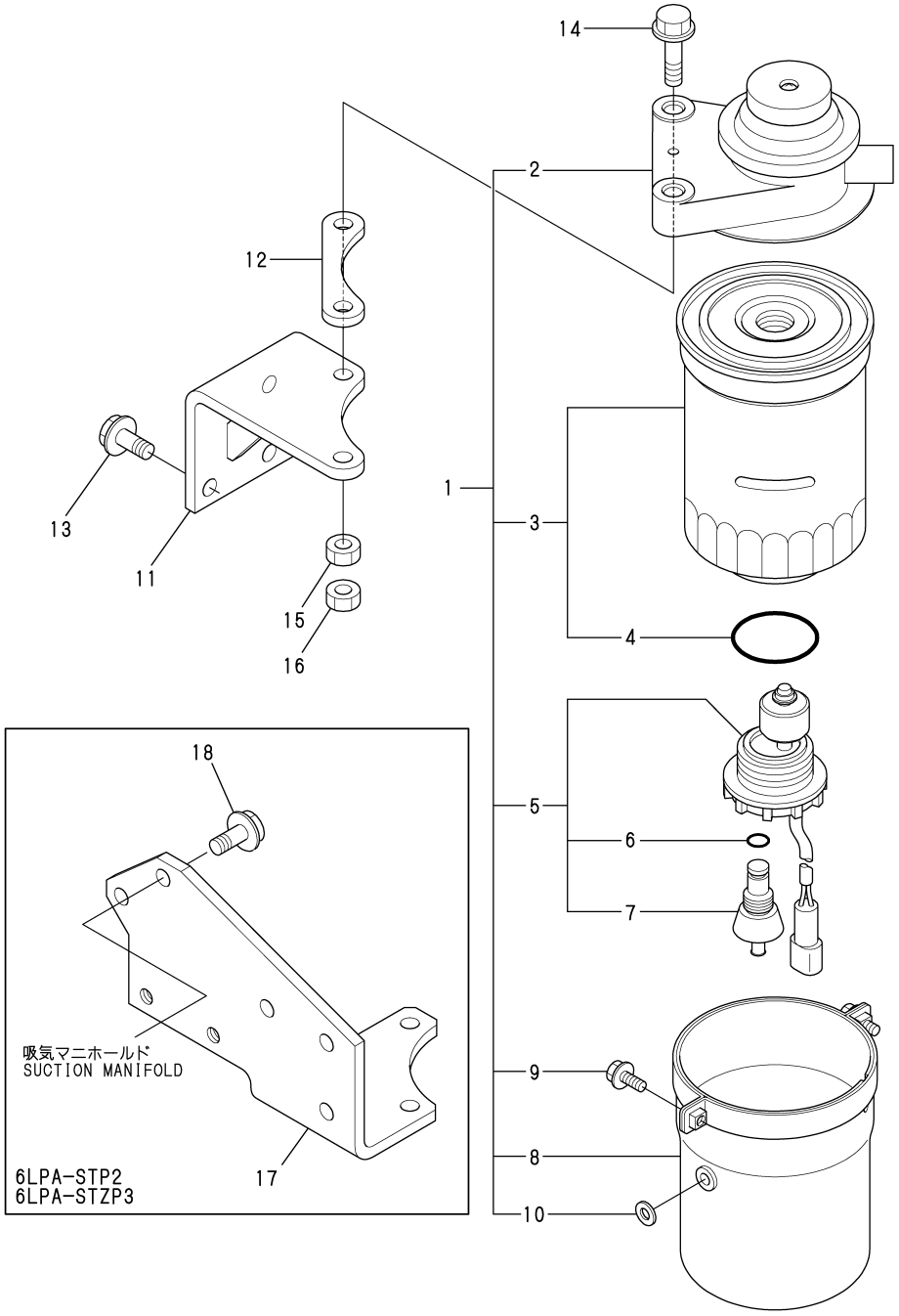

41. FUEL STRAINER

(A)=6LPA-STP2 (D)=
(B)=6LPA-STZP2 (E)=
(C)=6LPA-STZP3 (F)=

REF.	LEV.	PARTS NO.	DESCRIPTION	Q'TY (A)	(B)	(C)	(D)	(E)	(F)	I	R
1	1	119773-55700	FUEL FILTER ASSY	1	1	1					
2	2	X0861001400	CAP,FUEL STRAINER	1	1	1					
3	2	119773-55710	FILTER, CARTRIDGE	1	1	1					
4	3	X9080240360	O-RING	1	1	1					
5	2	X0719005370	SWITCH ASSY	1	1	1					
6	3	X9080210070	O-RING	1	1	1					
7	3	X0719240010	BOLT,DRAIN	1	1	1					
8	2	X0862202820	COVER,FO FILTER	1	1	1					
9	2	X9147005121	BOLT	2	2	2					
10	2	X0860620180	WASHER,RUBER	1	1	1					
11	1	119775-55600	BRACKET,FO STRAINER	1		1					
12	1	119773-55620	RUBER SEAT,FUEL	1	1	1					
13	1	26106-080182	BOLT M 8X 18 PLATED	3		3					
14	1	26106-080402	BOLT M 8X 40 PLATED	2	2	2					
15	1	26716-080002	NUT M 8	2	2	2					
16	1	26756-080002	LOCK NUT M 8 PLATED	2	2	2					
17	1	119778-26511	BRACKET,COOLER		1						
18	1	26106-080182	BOLT M 8X 18 PLATED		5						

N:Old $\xleftarrow[\text{No}]{\text{Yes}}$ New, Q:Old $\xleftarrow[\text{Yes}]{\text{No}}$ New, R:Old $\xleftarrow[\text{Yes}]{\text{Yes}}$ New, S:Old $\xleftarrow[\text{No}]{\text{No}}$ New, W:Add, Z:Discontinued, F:Interchangeable by set, K:Q'ty Change

(C)Copy Rights YANMAR CO.,LTD.

Fig.42. FUEL COOLER

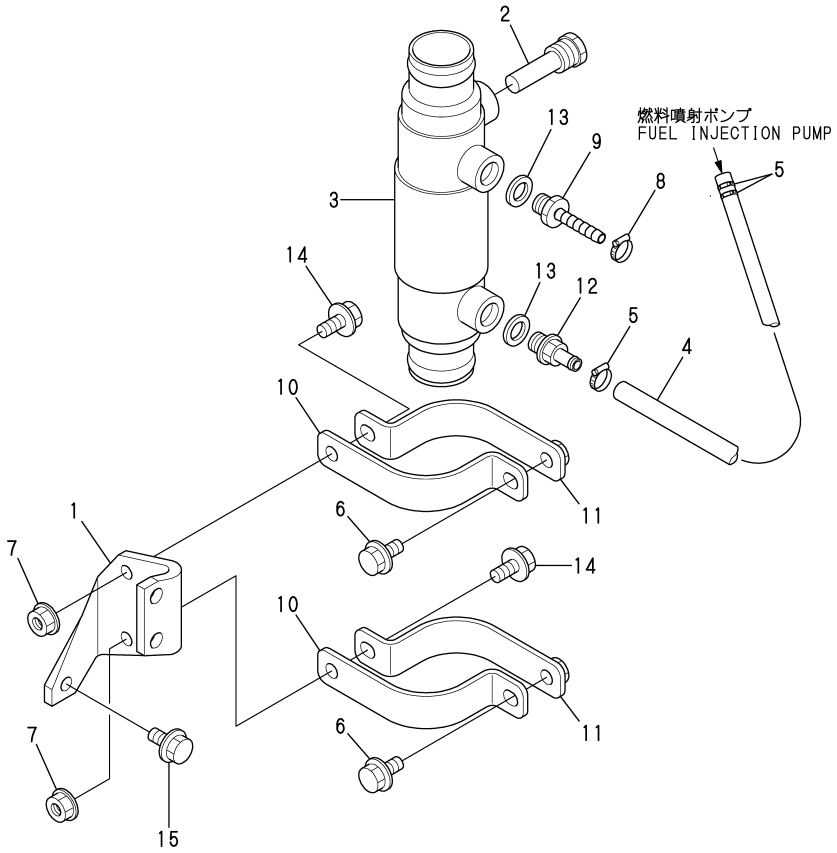

42. FUEL COOLER

(A)=6LPA-STP2 (D)=
(B)=6LPA-STZP2 (E)=
(C)=6LPA-STZP3 (F)=

REF.	LEV.	PARTS NO.	DESCRIPTION	Q'TY (A)	(B)	(C)	(D)	(E)	(F)	I	R
1	1	119773-55830	BRACKET,FUEL COOLER	1	1	1					
2	1	119574-44150	ZINC, ANTI-CORROSIVE	1	1	1					
3	1	119773-55760	COOLER,FUEL OIL	1	1	1					
4	1	119773-59123	PIPE,FUEL	1	1	1					
5	1	23000-019000	CLAMP 19	3	3	3					
6	1	26106-080162	BOLT M 8X 16 PLATED	2	2	2					
7	1	26306-080002	NUT	2	2	2					
8	1	119770-90930	CLIP	1	1	1					
9	1	119773-55770	JOINT,FO	1	1	1					
10	1	119773-55870	BRACKET,COOLER,FUEL	2	2	2					
11	1	119773-55890	BRACKET,COOLER,FUEL	2	2	2					
12	1	121250-49110	JOINT, PIPE	1	1	1					
13	1	22190-140002	SEAL WASHER 14S	2	2	2					
14	1	26106-080202	BOLT M 8X 20 PLATED	2	2	2					
15	1	26106-080302	BOLT M 8X 30 PLATED	1	1	1					

N:Old $\frac{\text{Yes}}{\text{No}}$ New, Q:Old $\frac{\text{No}}{\text{Yes}}$ New, R:Old $\frac{\text{Yes}}{\text{Yes}}$ New, S:Old $\frac{\text{No}}{\text{No}}$ New, W:Add, Z:Discontinued, F:Interchangeable by set, K:Q'ty Change

(C)Copy Rights YANMAR CO.,LTD.

Fig.43. GLOW PLUG

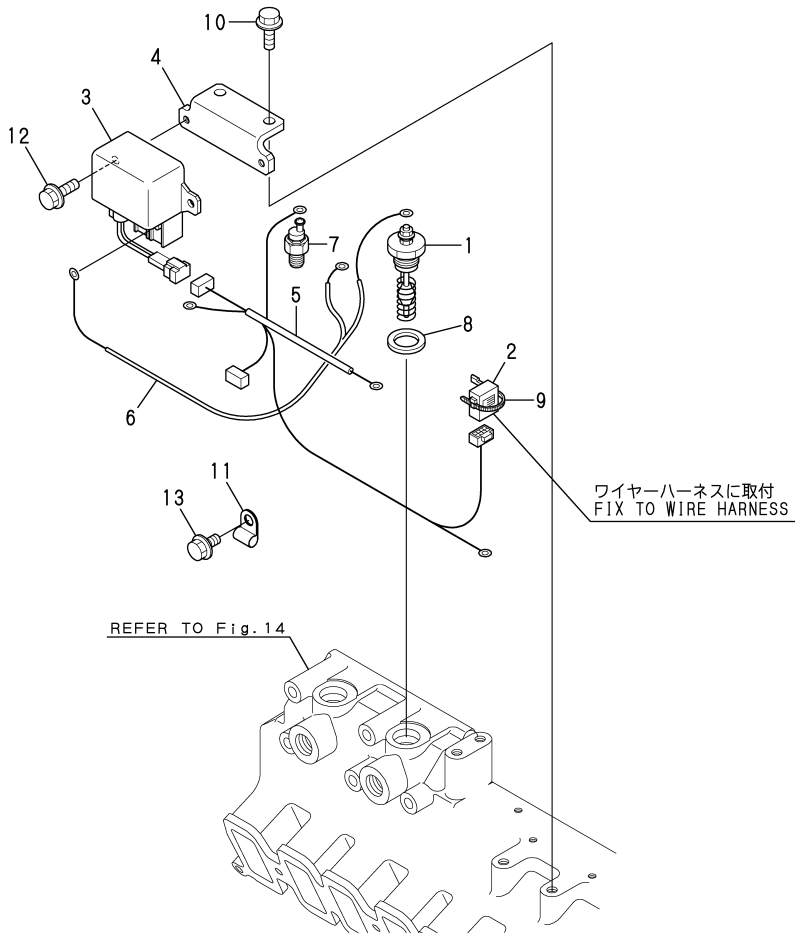

43. GLOW PLUG

(A)=6LPA-STP2 (D)=
(B)=6LPA-STZP2 (E)=
(C)=6LPA-STZP3 (F)=

REF.	LEV.	PARTS NO.	DESCRIPTION	Q'TY (A)	(B)	(C)	(D)	(E)	(F)	I	R
1	1	119575-77050	PLUG,HEATER	2	2	2					
2	1	119775-77070	CONTROLLER, RELAY	1	1	1					
3	1	119578-77140	RELAY, 12V-130A	1	1	1					
4	1	119775-77640	BRACKET, RELAY	1	1	1					
5	1	119775-77850	HARNESS, WIRE	1	1	1					
6	1	119775-77860	HARNESS, WIRE	1	1	1					
7	1	124616-91370	SWITCH, THERMO	1	1	1					
8	1	23414-200000	GASKET 20, ROUND	2	2	2					
9	1	29622-250001	BAND RF 250	2	2	2					
10	1	26106-080202	BOLT M 8X 20 PLATED	2	2	2					
11	1	119593-39450	RETAINER	2	2	2					
12	1	26106-060162	BOLT M 6X 16 PLATED	2	2	2					
13	1	26106-080162	BOLT M 8X 16 PLATED	2	2	2					

N:Old $\xleftarrow[\text{No}]{\text{Yes}}$ New, Q:Old $\xleftarrow[\text{Yes}]{\text{No}}$ New, R:Old $\xleftarrow[\text{Yes}]{\text{Yes}}$ New, S:Old $\xleftarrow[\text{No}]{\text{No}}$ New, W:Add, Z:Discontinued, F:Interchangeable by set, K:Q'ty Change

(C)Copy Rights YANMAR CO.,LTD.

Fig.44. CABLE BRACKET

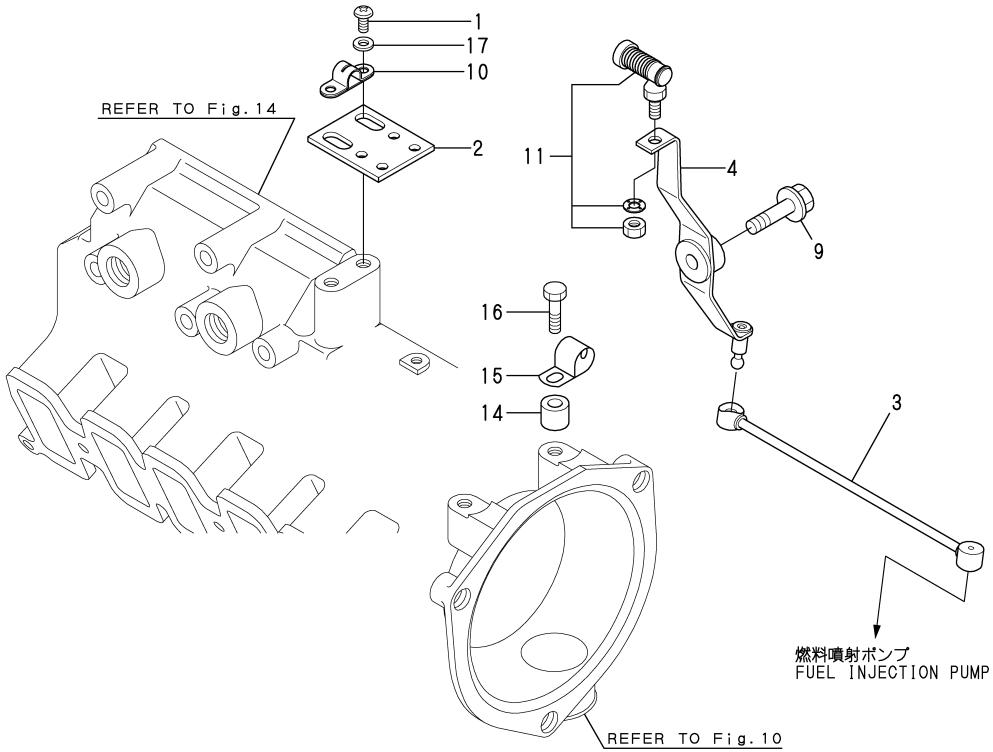

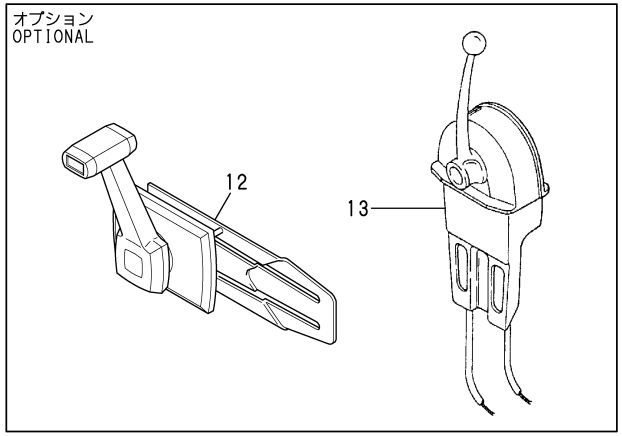

44. CABLE BRACKET

(A)=6LPA-STP2 (D)=
(B)=6LPA-STZP2 (E)=
(C)=6LPA-STZP3 (F)=

REF.	LEV.	PARTS NO.	DESCRIPTION	Q'TY (A)	(B)	(C)	(D)	(E)	(F)	I	R
1	1	26022-050162	SCREW M 5X 16	2	2	2					
2	1	119773-67101	BRACKET,REGURATOR	1	1	1					
3	1	119773-67150	ROD,ACCELE CONTROL	1	1	1					
4	1	119773-67220	REGURATOR LEVER	1	1	1					
9	1	26106-080302	BOLT M 8X 30 PLATED	1	1	1					
10	1	41710-000410	CLAMP	1	1	1					
11	1	41710-001300	JOINT	1	1	1					
12	1	128170-86501	REMOCON HEAD (MN	1	1	1					
13	1	41730-000681	MT-3 REMO-CON	1	1	1					
14	1	127688-77340	SPACER	1	1	1					
15	1	160870-78700	CLAMP, CORD	1	1	1					
16	1	26106-080302	BOLT M 8X 30 PLATED	1	1	1					
17	1	22217-050000	SPRING WASHER 5	2	2	2					

N:Old $\overset{\text{Yes}}{\underset{\text{No}}{\leftrightarrow}}$ New, Q:Old $\overset{\text{No}}{\underset{\text{Yes}}{\leftrightarrow}}$ New, R:Old $\overset{\text{Yes}}{\underset{\text{Yes}}{\leftrightarrow}}$ New, S:Old $\overset{\text{No}}{\underset{\text{No}}{\leftrightarrow}}$ New, W:Add, Z:Discontinued, F:Interchangeable by set, K:Q'ty Change

(C)Copy Rights YANMAR CO.,LTD.

Fig.45. POWER STEERING PUMP

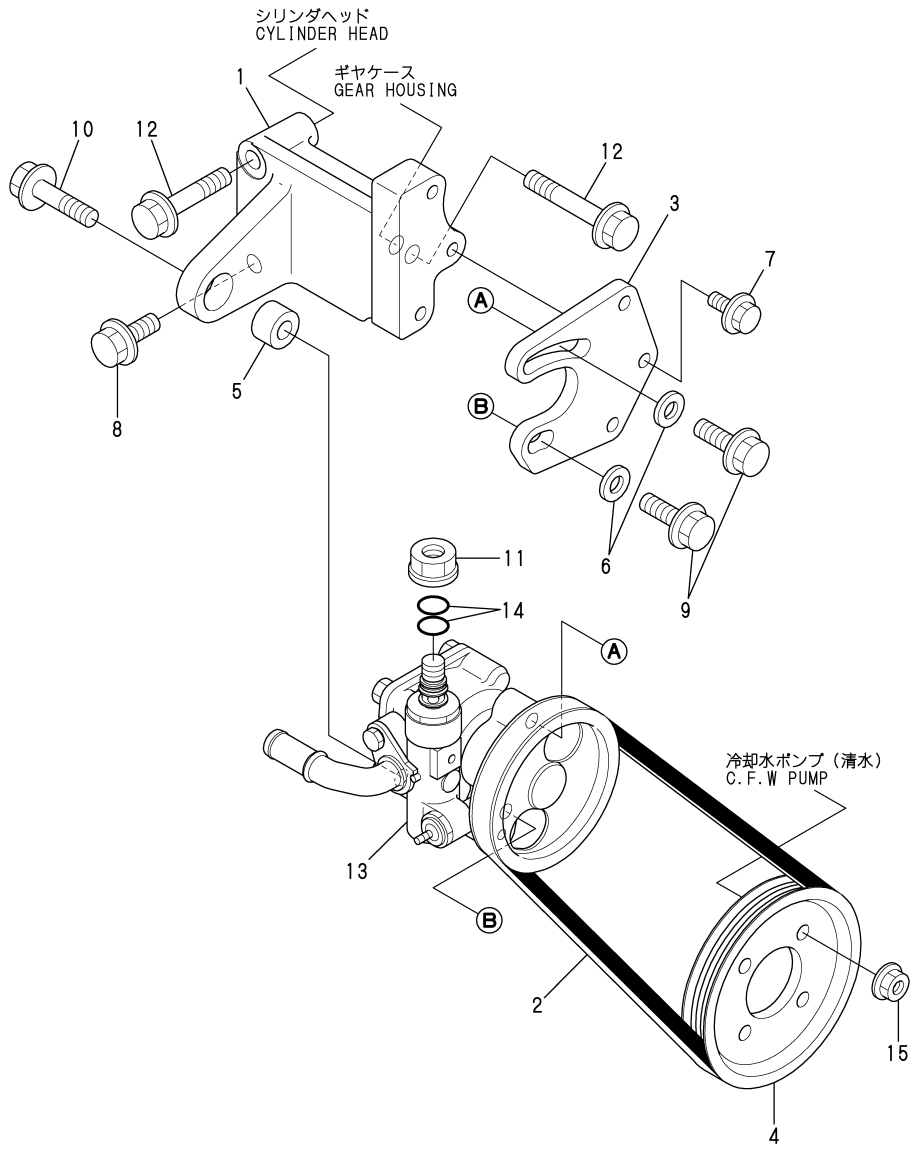

45. POWER STEERING PUMP

(A)=6LPA-STP2 (D)=
(B)=6LPA-STZP2 (E)=
(C)=6LPA-STZP3 (F)=

REF.	LEV.	PARTS NO.	DESCRIPTION	Q'TY (A)	(B)	(C)	(D)	(E)	(F)	I	R
1	1	119778-26500	BRACKET,P-STEERING		1						
2	1	119787-26540	V-BELT		1						
3	1	119779-26551	ADJUSTER,BELT		1						
4	1	119779-49300	V-PULLEY,CWF-P		1						
5	1	119773-77340	COLLER,GENERATOR		1						
6	1	22137-100000	WASHER 10,POLISHED		2						
7	1	26106-080182	BOLT M 8X 18 PLATED		3						
8	1	26136-100252	BOLT M10X25		1						
9	1	26136-100252	BOLT M10X25		2						
10	1	26136-100302	BOLT		1						
11	1	26376-120002	U-NUT M12		1						
12	1	26136-100602	BOLT M10X 60 PLATED		2						
13	1	119787-26100	PUMP,POWER STEERING		1						
14	1	24351-010110	O-RING 1A 1011		2						
15	1	26306-080002	NUT		4						

N:Old $\frac{\text{Yes}}{\text{No}}$ New, Q:Old $\frac{\text{No}}{\text{Yes}}$ New, R:Old $\frac{\text{Yes}}{\text{Yes}}$ New, S:Old $\frac{\text{No}}{\text{No}}$ New, W:Add, Z:Discontinued, F:Interchangeable by set, K:Q'ty Change

(C)Copy Rights YANMAR CO.,LTD.

Fig.46. POWER STEERING COOLER & TANK

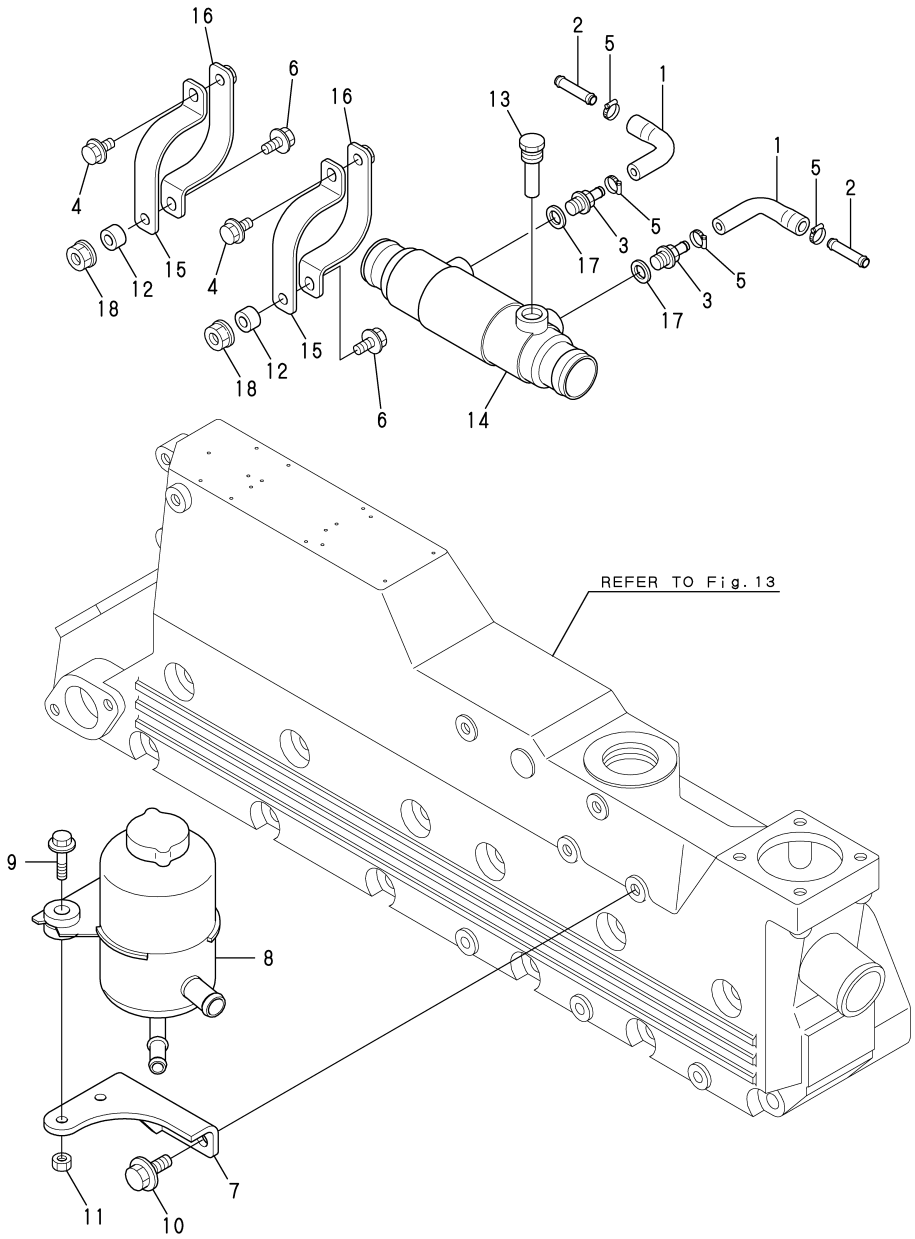

46. POWER STEERING COOLER & TANK

(A)=6LPA-STP2 (D)=
(B)=6LPA-STZP2 (E)=
(C)=6LPA-STZP3 (F)=

REF.	LEV.	PARTS NO.	DESCRIPTION	Q'TY (A)	(B)	(C)	(D)	(E)	(F)	I	R
1	1	119778-26620	ATF-T,COOLER		2						
2	1	119778-26750	TUBE,P/S COOLER		2						
3	1	121250-49110	JOINT, PIPE		2						
4	1	26106-080162	BOLT M 8X 16 PLATED		2						
5	1	119172-48190	CLAMP 19		4						
6	1	26106-080202	BOLT M 8X 20 PLATED		2						
7	1	119787-26520	BRACKET,TANK,OIL		1						
8	1	196346-34860	RESERVIOR ASSY, HYD.		1						
9	1	26106-060252	BOLT M 6X 25 PLATED		2						
10	1	26106-080252	BOLT M 8X 25 PLATED		2						
11	1	26716-060002	NUT 6		2						
12	1	127610-03150	SPACER		2						
13	1	119574-44150	ZINC, ANTI-CORROSIVE		1						
14	1	119773-55760	COOLER,FUEL OIL		1						
15	1	119773-55870	BRACKET,COOLER,FUEL		2						
16	1	119773-55890	BRACKET,COOLER,FUEL		2						
17	1	23414-140018	GASKET 14		2						
18	1	26306-080002	NUT		2						

N:Old $\frac{\text{Yes}}{\text{No}}$ New, Q:Old $\frac{\text{No}}{\text{Yes}}$ New, R:Old $\frac{\text{Yes}}{\text{Yes}}$ New, S:Old $\frac{\text{No}}{\text{No}}$ New, W:Add, Z:Discontinued, F:Interchangeable by set, K:Q'ty Change

(C)Copy Rights YANMAR CO.,LTD.

Fig.47. ATF PIPE

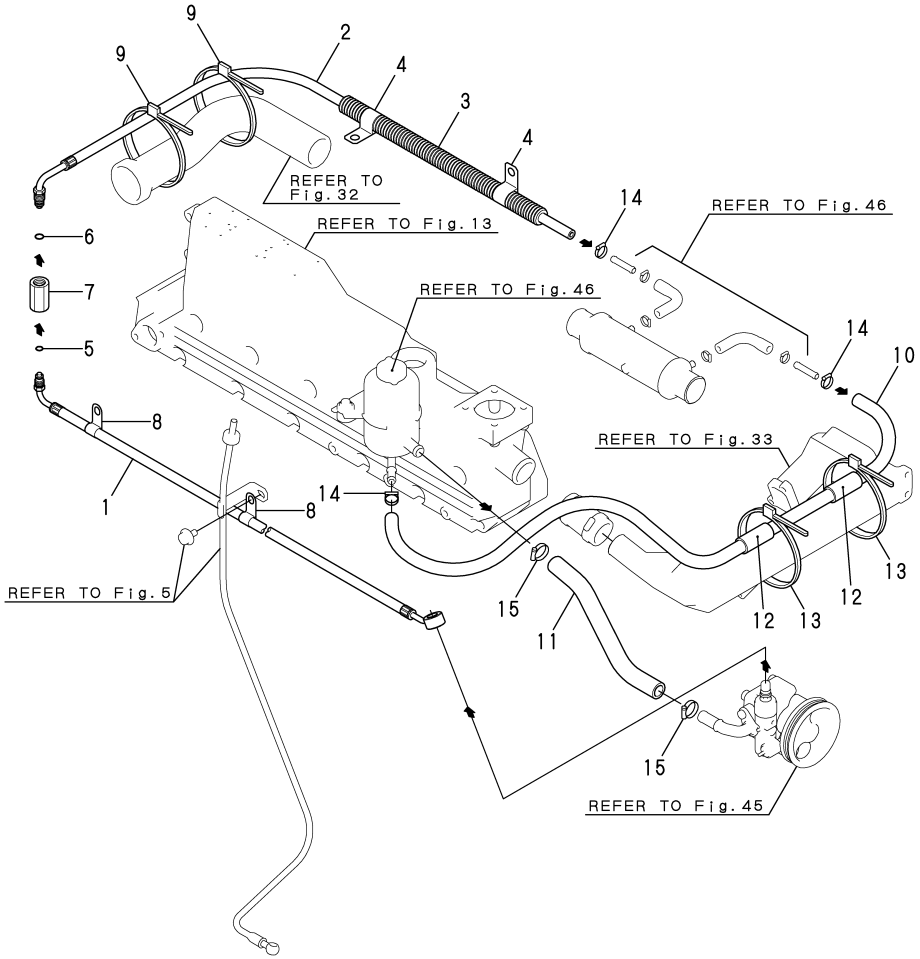

47. ATF PIPE

(A)=6LPA-STP2 (D)=
(B)=6LPA-STZP2 (E)=
(C)=6LPA-STZP3 (F)=

REF.	LEV.	PARTS NO.	DESCRIPTION	Q'TY (A)	(B)	(C)	(D)	(E)	(F)	I	R
1	1	119778-26400	ATF-T(PUMP-DRIVE		1						
2	1	119778-26410	ATF-T(DRIVE-COOLER		1						
3	1	119778-26650	CORRGATED TUBE		1						
4	1	119778-26660	CLAMP		2						
5	1	119778-26700	O-RING,INPUT-SIDE		1						
6	1	119778-26710	O-RING,OUTPUT-SIDE		1						
7	1	119778-26800	BRASS COUPLING		1						
8	1	119593-39450	RETAINER		2						
9	1	194250-51660	BAND 250		2						
10	1	119787-26550	ATF-T,COOLER-TANK		1						
11	1	119787-26561	ATF-T(TANK-PUMP		1						
12	1	119778-26670	PROTECTOR		2						
13	1	194250-51660	BAND 250		2						
14	1	119172-48190	CLAMP 19		3						
15	1	119172-48250	CLAMP 25		2						

N:Old ◄Yes/No► New, Q:Old ◄No/Yes► New, R:Old ◄Yes/Yes► New, S:Old ◄No/No► New, W:Add, Z:Discontinued, F:Interchangeable by set, K:Q'ty Change

(C)Copy Rights YANMAR CO.,LTD.

Fig.48. CLUTCH & DRIVE ATTACHMENT

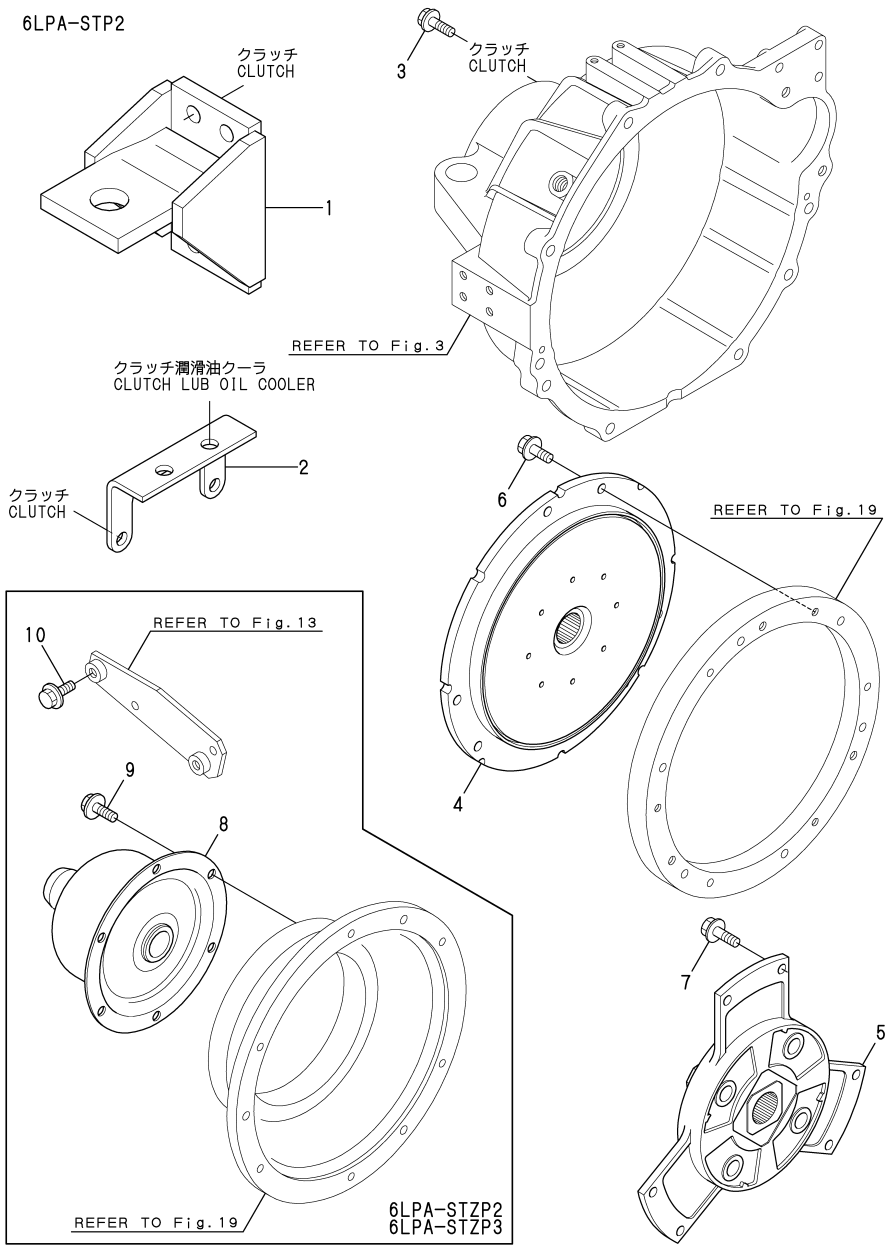

Remarks
(1)NOT ILLUSTRATED.

48. CLUTCH & DRIVE ATTACHMENT

(A)=6LPA-STP2 (D)=
(B)=6LPA-STZP2 (E)=
(C)=6LPA-STZP3 (F)=

	REF.	LEV.	PARTS NO.	DESCRIPTION	Q'TY (A)	(B)	(C)	(D)	(E)	(F)	I	R
	1	1	119773-08250	BRACKET,CLUTCH	2							
	2	1	119773-85550	BRACKET,COOLER	1							
	3	1	26106-100302	BOLT M10X 30 PLATED	6							
	4	1	119773-85520	DUMPER	1							
	5	1	119773-85500	DUMPER	1							
	6	1	26106-100302	BOLT M10X 30 PLATED	6							
	7	1	26106-100252	BOLT M10X 25 PLATED	6							
	8	1	119778-85500	COUPLING CMP		1	1					
	9	1	26106-100202	BOLT M10X 20 PLATED		6	6					
	10	1	26106-100182	BOLT M10X 18 PLATED		2	2					
I	10-1	1	26106-080182	BOLT M 8X 18 PLATED		2	2				S	
			(B=*2008.12)	(C=*2008.12)								
	11	1	177523-80110	CLUTCH KMH50A I=2.43	1							1
	12	1	177523-80120	CLUTCH KMH50A I=2.13	1							1
	13	1	177523-80130	CLUTCH KMH50A I=1.97	1							1

N:Old ←Yes/No→ New, Q:Old ←No/Yes→ New, R:Old ←Yes/Yes→ New, S:Old ←No/No→ New, W:Add, Z:Discontinued, F:Interchangeable by set, K:Q'ty Change

(C)Copy Rights YANMAR CO.,LTD.

Fig.49. STARTING MOTOR

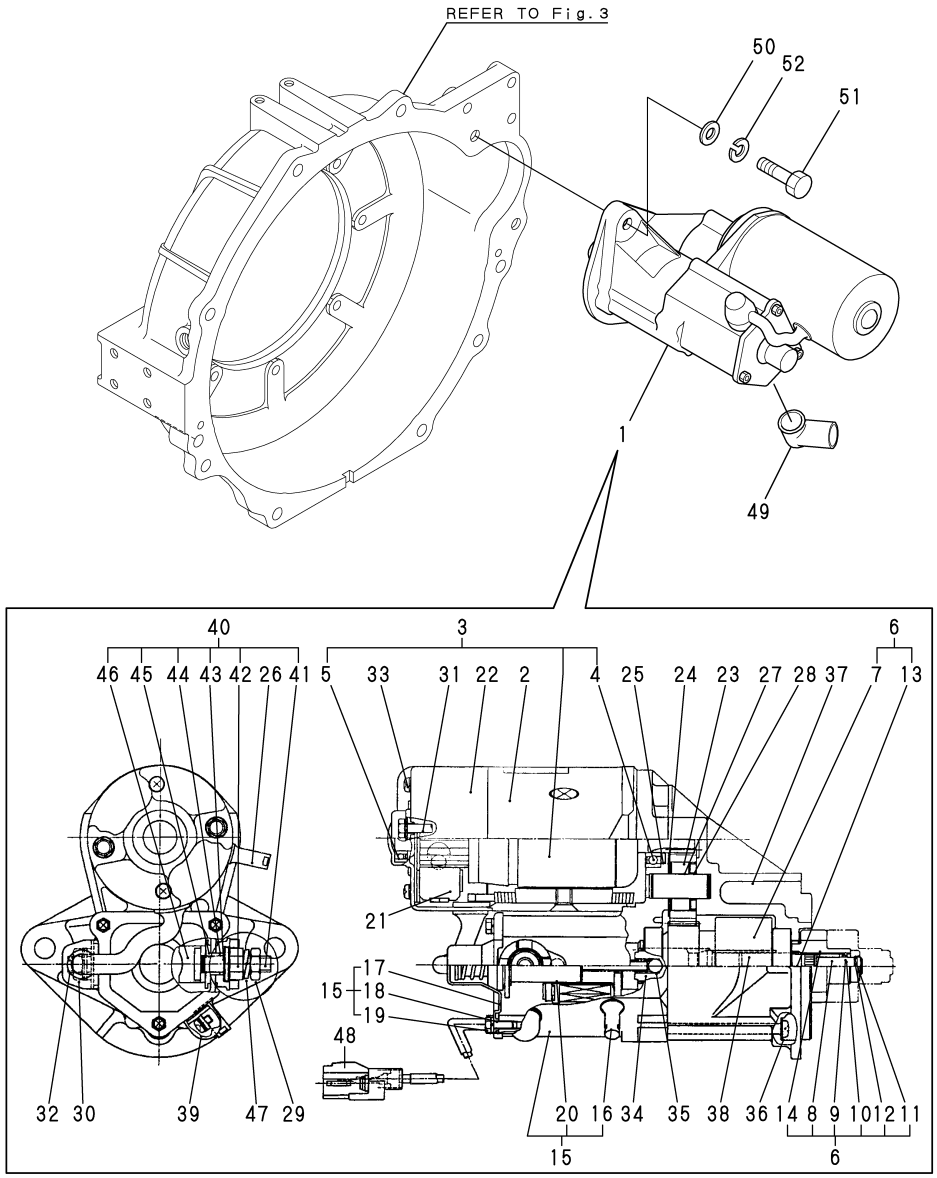

49. STARTING MOTOR

(A)=6LPA-STP2 (D)=
(B)=6LPA-STZP2 (E)=
(C)=6LPA-STZP3 (F)=

REF.	LEV.	PARTS NO.	DESCRIPTION	Q'TY (A)	(B)	(C)	(D)	(E)	(F)	I	R
1	1	119773-77010	STARTER	1	1	1					
2	2	X0281003001	YOKE	1	1	1					
3	2	X0282001780	ARMATURE	1	1	1					
4	3	X9491001930	BEARING	1	1	1					
5	3	X9491001750	BEARING	1	1	1					
6	2	X1280995160	STARTER KIT	1	1	1					
7	3	X0283005381	CLUTCH SUB-ASSY(STAR	1	1	1					
8	3	X9491704030	SPRING	1	1	1					
9	3	X9490721130	RING	1	1	1					
10	3	X0283270160	RETAINER	1	1	1					
11	3	X0280210250	NUT	1	1	1					
12	3	X9490721120	RING	1	1	1					
13	3	X0283810071	SHAFT	1	1	1					
14	3	X0283716640	PINION,STARTER	1	1	1					
15	2	X1534002321	SWITCH ASSY,MAGNETIC	1	1	1					
16	3	X0280650250	BUSHING	1	1	1					
17	3	X0535050290	COVER	1	1	1					
18	3	X0534040240	PACKING	1	1	1					
19	3	X9490474440	BOLT	1	1	1					
20	3	X0536600443	PLUNGER	1	1	1					
21	2	X0285100500	HOLDER	1	1	1					
22	2	X0285017860	FRAME,STARTER END	1	1	1					
23	2	X0283711500	PINION	1	1	1					
24	2	X0283270171	RETAINER	1	1	1					
25	2	X9490200600	WASHER	1	1	1					
26	2	X0280625790	COVER	1	1	1					
27	2	X0283060070	ROLLER	5	5	5					
28	2	X0280630030	RETAINER	1	1	1					
29	2	X9017010061	NUT	1	1	1					
30	2	X9490564480	NUT	1	1	1					
31	2	X9490423741	BOLT,THROUGH	2	2	2					
32	2	X9490441912	BOLT	1	1	1					
33	2	X9490076530	SCREW	2	2	2					
34	2	X9491704070	SPRING	1	1	1					
35	2	X9491200240	BALL	1	1	1					
36	2	X9490065080	SCREW	3	3	3					
37	2	X1284018620	HOUSING,STARTER	1	1	1					
38	2	X9491704040	SPRING	1	1	1					
39	2	X9490076850	SCREW	3	3	3					
40	2	X1280995610	STARTER KIT	1	1	1					
41	3	X0535117630	BOLT	1	1	1					
42	3	X9490505650	NUT, HEXAGON	1	1	1					
43	3	X9490119320	WASHER	1	1	1					
44	3	X0534497181	BUSHING	1	1	1					
45	3	X0534497510	BUSHING	1	1	1					
46	3	X0535137770	PLATE,CONTACT	1	1	1					
47	2	X9025810001	WASHER	1	1	1					
48	2	X0536807770	WIRE,SUB-ASSY,CONNEC	1	1	1					
49	1	119773-77030	COVER	1	1	1					
50	1	22117-120000	WASHER 12	2	2	2					
51	1	26116-120452	BOLT M12X 45 PLATED	2	2	2					

N:Old $\overset{\text{Yes}}{\underset{\text{No}}{\leftrightarrow}}$ New, Q:Old $\overset{\text{No}}{\underset{\text{Yes}}{\leftrightarrow}}$ New, R:Old $\overset{\text{Yes}}{\underset{\text{Yes}}{\leftrightarrow}}$ New, S:Old $\overset{\text{No}}{\underset{\text{No}}{\leftrightarrow}}$ New, W:Add, Z:Discontinued, F:Interchangeable by set, K:Q'ty Change

++ CONTINUE ++

(C)Copy Rights YANMAR CO.,LTD.

Fig.49. STARTING MOTOR

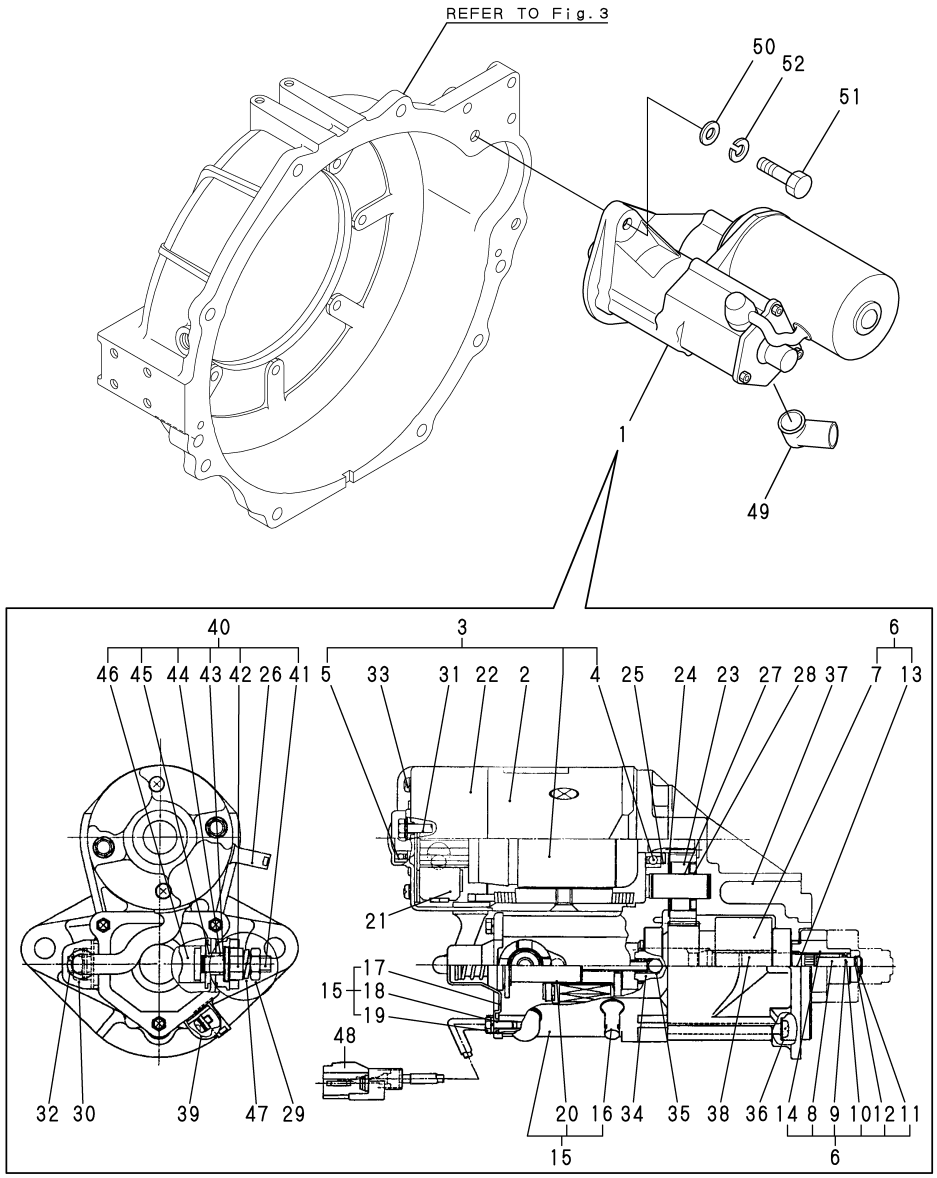

49. STARTING MOTOR

(A)=6LPA-STP2 (D)=
(B)=6LPA-STZP2 (E)=
(C)=6LPA-STZP3 (F)=

REF.	LEV.	PARTS NO.	DESCRIPTION	Q'TY (A)	(B)	(C)	(D)	(E)	(F)	I	R
52	1	22217-120000	SPRING WASHER 12	2	2	2					

N:Old ⇄(Yes/No) New, Q:Old ⇄(No/Yes) New, R:Old ⇄(Yes/Yes) New, S:Old ⇄(No/No) New, W:Add, Z:Discontinued, F:Interchangeable by set, K:Q'ty Change

(C)Copy Rights YANMAR CO.,LTD.

Fig.50. GENERATOR

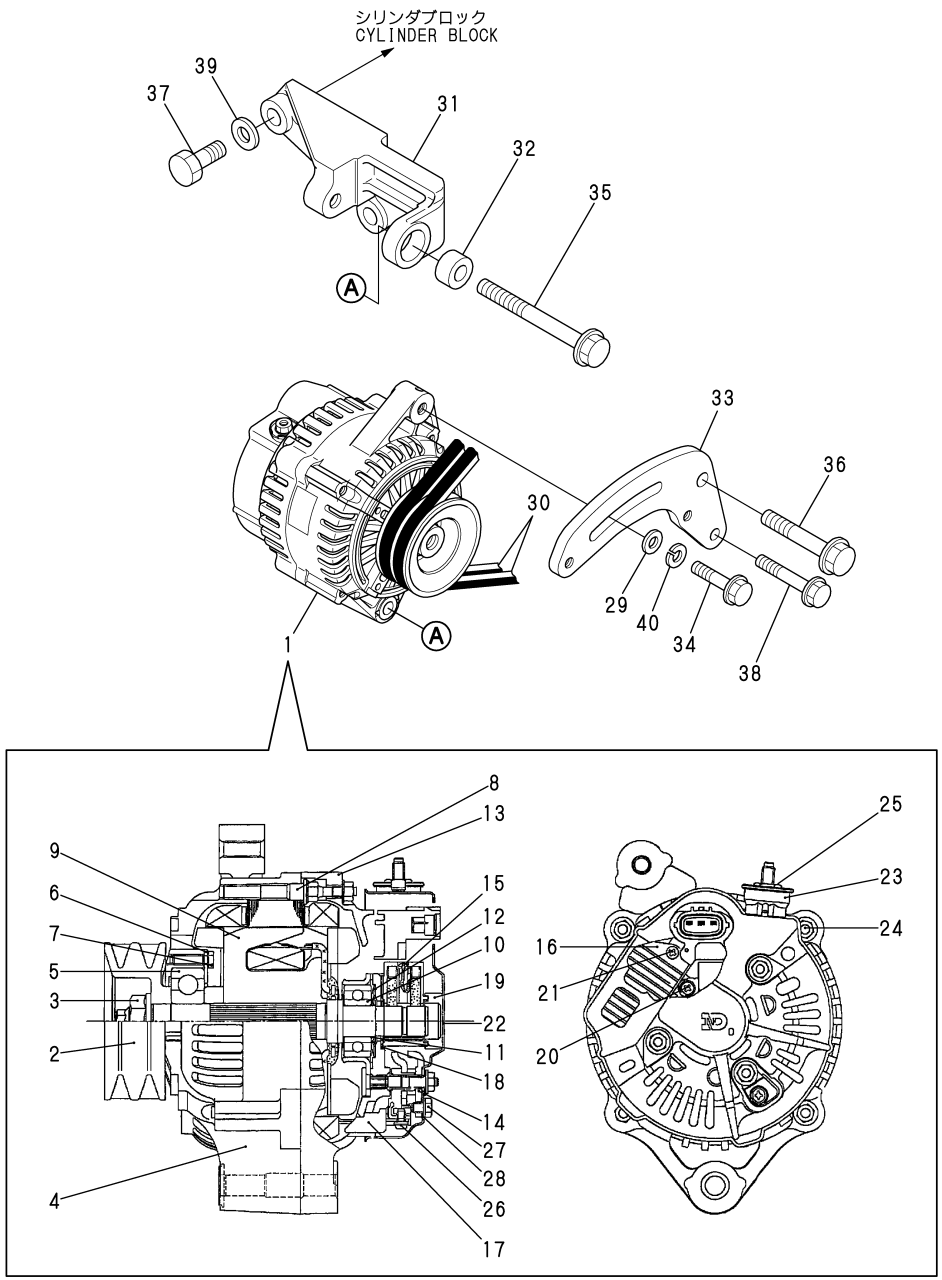

50. GENERATOR

(A)=6LPA-STP2 (D)=
(B)=6LPA-STZP2 (E)=
(C)=6LPA-STZP3 (F)=

REF.	LEV.	PARTS NO.	DESCRIPTION	Q'TY (A)	(B)	(C)	(D)	(E)	(F)	I	R
1	1	119773-77200	GENERATOR	1	1	1					
2	2	X0210416680	PULLY	1	1	1					
3	2	X9490562520	NUT	1	1	1					
4	2	X0214006030	FRAME ASSY,DRIVE END	1	1	1					
5	3	X9491004370	BALL BEARING	1	1	1					
6	3	X0214110570	RETAINER PLTE	1	1	1					
7	3	X9490065590	SCREW	4	4	4					
8	3	X9490432000	STUD BOLT	4	4	4					
9	2	X0212005000	ROTOR ASSY	1	1	1					
10	3	X9491002790	BALL BEARING	1	1	1					
11	3	X0215060070	COVER	1	1	1					
12	2	X0215420160	WASHER	1	1	1					
13	2	X0215016550	END FRAME	1	1	1					
14	2	X0215804510	HOLDER SUB-ASSY	1	1	1					
15	2	X0216202720	FOLDER	1	1	1					
16	2	X1260001940	REGULATOR ASSY	1	1	1					
17	2	X0216051970	BUSH	4	4	4					
18	2	X0216260190	SEAL	1	1	1					
19	2	X0216260250	SEAL	1	1	1					
20	2	X9490065460	SCREW	3	3	3					
21	2	X9490075110	SCREW	2	2	2					
22	2	X0215512260	END COVER	1	1	1					
23	2	X0216052070	BUSH	1	1	1					
24	2	X9490562481	NUT	7	7	7					
25	2	X9490563080	NUT	1	1	1					
26	2	X9490076280	SCREW W/WASHER	4	4	4					
27	2	X9490066401	SCREW	1	1	1					
28	2	X0216025230	PLATE, TERMINAL	1	1	1					
29	1	121236-77340	SPACER	1	1	1					
30	1	119775-77260	V-BELT	2	2	2					
31	1	119773-77320	BRACKET,GENERATOR	1	1	1					
32	1	119773-77340	COLLER,GENERATOR	1	1	1					
33	1	119773-77350	ADJUSTER,BELT	1	1	1					
34	1	26106-080352	BOLT M 8X 35 PLATED	1	1	1					
35	1	26106-100952	BOLT M10X 95 PLATED	1	1	1					
36	1	26136-100602	BOLT M10X 60 PLATED	1	1	1					
37	1	26156-120402	BOLT M12X 40	2	2	2					
38	1	26106-080552	BOLT M 8X 55 PLATED	1	1	1					
39	1	22117-120000	WASHER 12	2	2	2					
40	1	22213-080000	SPRING WASHER 8	1	1	1					

N:Old $\frac{\text{Yes}}{\text{No}}$ New, Q:Old $\frac{\text{No}}{\text{Yes}}$ New, R:Old $\frac{\text{Yes}}{\text{Yes}}$ New, S:Old $\frac{\text{No}}{\text{No}}$ New, W:Add, Z:Discontinued, F:Interchangeable by set, K:Q'ty Change

(C)Copy Rights YANMAR CO.,LTD.

Fig.51. BELT COVER

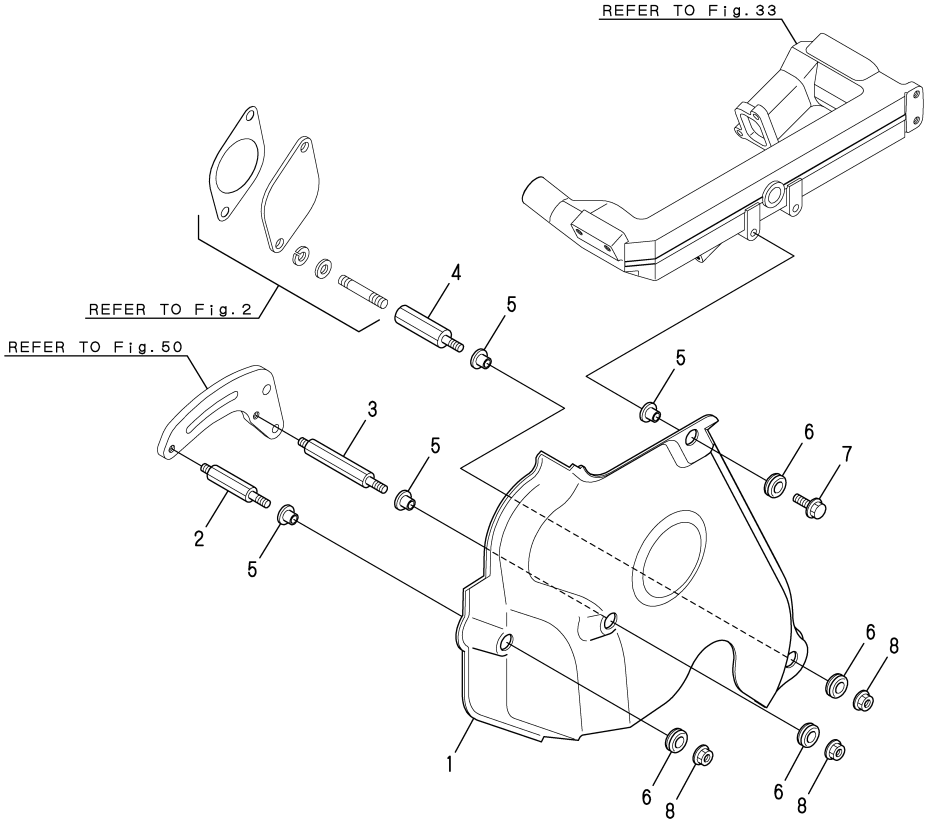

51. BELT COVER

(A)=6LPA-STP2 (D)=
(B)=6LPA-STZP2 (E)=
(C)=6LPA-STZP3 (F)=

REF.	LEV.	PARTS NO.	DESCRIPTION	Q'TY (A)	(B)	(C)	(D)	(E)	(F)	I	R
1	1	119775-77450	COVER , BELT	1	1	1					
2	1	119775-77460	BOLT, SPACER A	1	1	1					
3	1	119775-77470	BOLT, SPACER B	1	1	1					
4	1	119775-77490	BOLT, SPACER D	1	1	1					
5	1	119578-77680	COLLAR, CONTROLLER	4	4	4					
6	1	119578-91351	RUBBER, CUSHION	4	4	4					
7	1	26106-080252	BOLT M 8X 25 PLATED	1	1	1					
8	1	26306-080002	NUT	3	3	3					

N:Old $\xleftrightarrow[\text{No}]{\text{Yes}}$ New, Q:Old $\xleftrightarrow[\text{Yes}]{\text{No}}$ New, R:Old $\xleftrightarrow[\text{Yes}]{\text{Yes}}$ New, S:Old $\xleftrightarrow[\text{No}]{\text{No}}$ New, W:Add, Z:Discontinued, F:Interchangeable by set, K:Q'ty Change

(C)Copy Rights YANMAR CO.,LTD.

Fig.52. INSTRUMENT PANEL(B-TYPE,OPTIONAL)

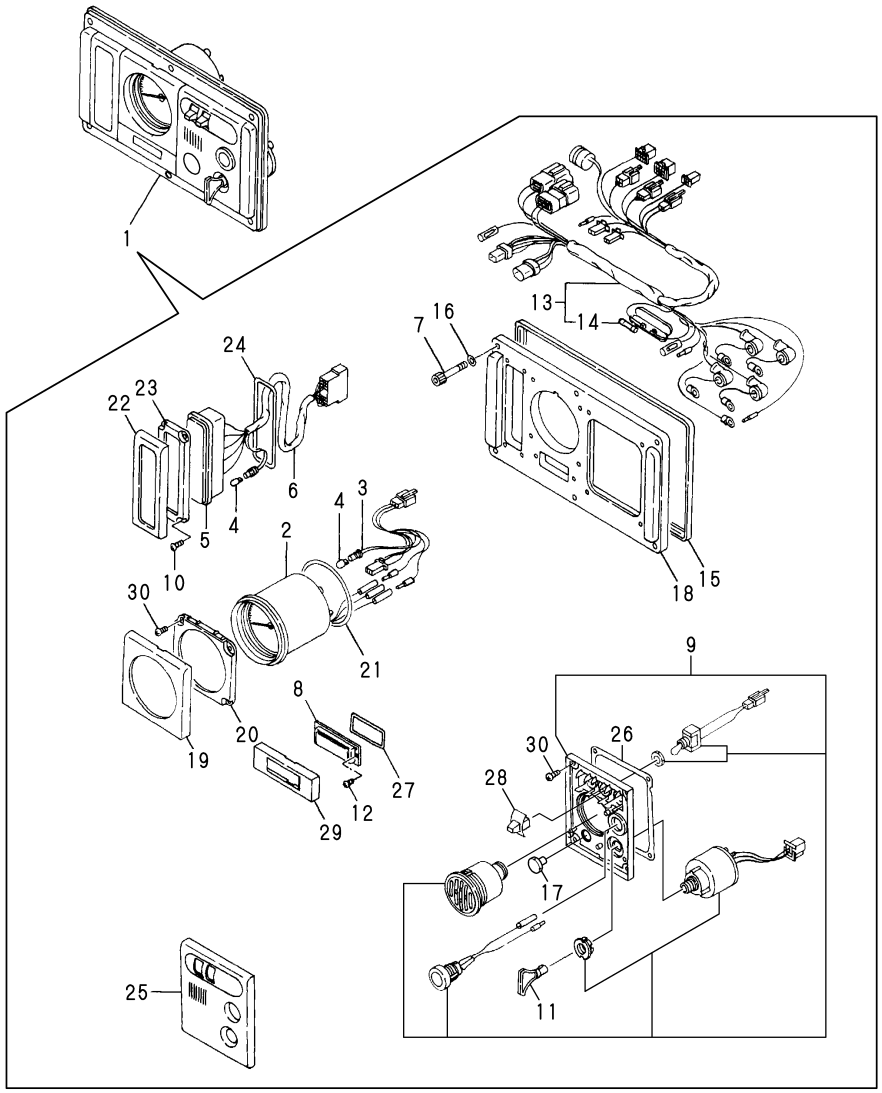

52. INSTRUMENT PANEL(B-TYPE,OPTIONAL)

(A)=6LPA-STP2 (D)=
(B)=6LPA-STZP2 (E)=
(C)=6LPA-STZP3 (F)=

REF.	LEV.	PARTS NO.	DESCRIPTION	Q'TY (A)	(B)	(C)	(D)	(E)	(F)	I	R
1	1	119773-91132	IMSTRUMENT PANEL	1	1	1					
2	2	119773-91250	METER, TACHO./HOUR	1	1	1					
3	2	129574-91870	WIRE	1	1	1					
4	2	124617-91980	BULB	7	7	7					
5	2	119773-91261	BOX	1	1	1					
6	2	119773-91240	WIRE W/BULB	1	1	1					
7	2	127687-91870	BOLT 6X 35	6	6	6					
8	2	129170-91650	COVER, BLIND	1	1	1					
9	2	129470-91191	BOX ASSY,SW	1	1	1					
10	2	127692-91440	SCREW	4	4	4					
11	2	123482-91291	KEY, SWITCH	1	1	1					
12	2	127692-91450	SCREW	2	2	2					
13	2	119773-91141	WIREHARNESS	1	1	1					
14	3	124617-91990	FUSE (3A)	1	1	1					
15	2	128391-91700	PACKING	1	1	1					
16	2	127687-91880	WASHER	6	6	6					
17	2	129574-91760	COVER, BLIND	1	1	1					
18	2	128391-91930	PANEL	1	1	1					
19	2	129574-91620	COVER	1	1	1					
20	2	129574-91420	BRACKET	1	1	1					
21	2	129574-91720	GASKET	1	1	1					
22	2	128391-91640	COVER	1	1	1					
23	2	128391-91440	PLATE	1	1	1					
24	2	128391-91740	GASKET	1	1	1					
25	2	129170-91610	COVER	1	1	1					
26	2	129574-91710	GASKET	1	1	1					
27	2	129574-91750	GASKET	1	1	1					
28	2	129574-91770	KNOB	2	2	2					
29	2	129574-91650	COVER	1	1	1					
30	2	127692-91410	SCREW	8	8	8					

N:Old ◄Yes/No► New, Q:Old ◄No/Yes► New, R:Old ◄Yes/Yes► New, S:Old ◄No/No► New, W:Add, Z:Discontinued, F:Interchangeable by set, K:Q'ty Change

(C)Copy Rights YANMAR CO.,LTD.

Fig.53. INSTRUMENT PANEL(C-TYPE,OPTIONAL)

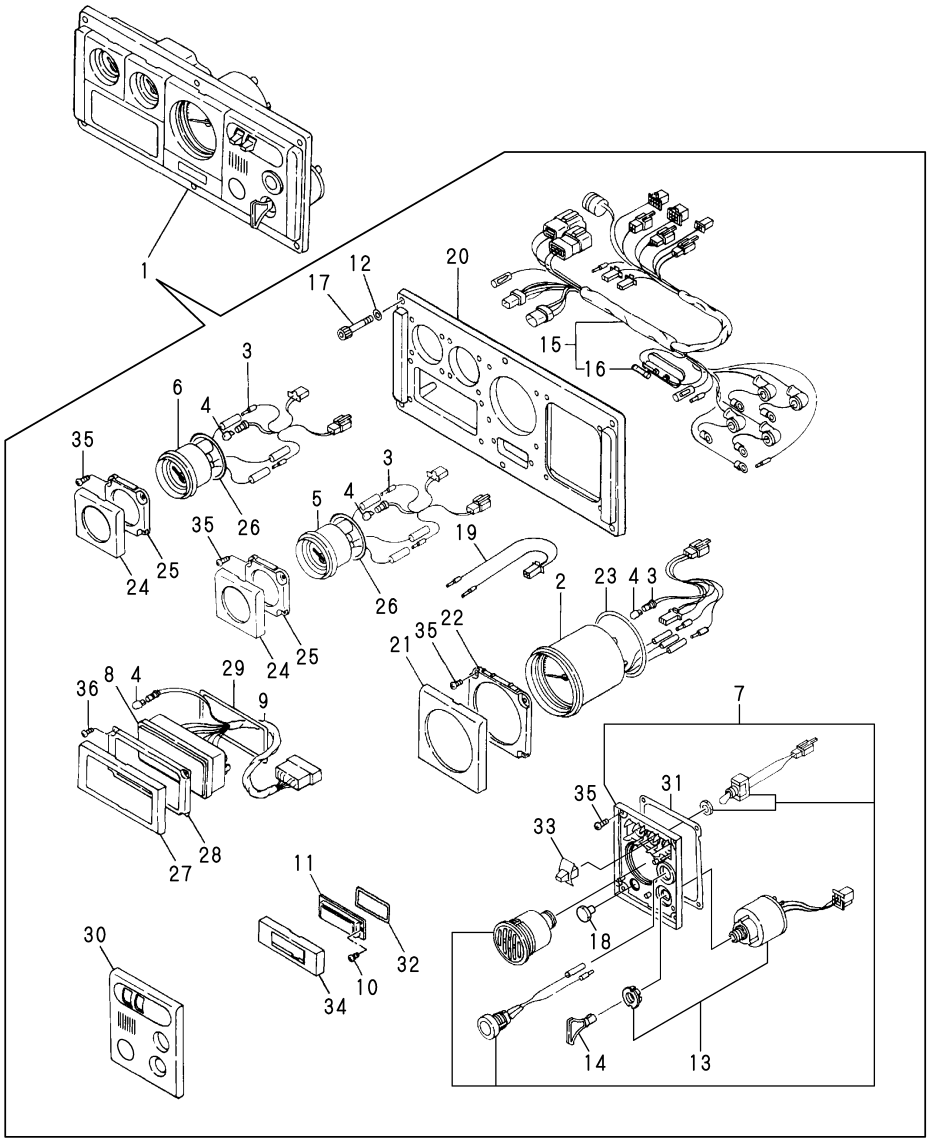

53. INSTRUMENT PANEL(C-TYPE,OPTIONAL)

(A)=6LPA-STP2 (D)=
(B)=6LPA-STZP2 (E)=
(C)=6LPA-STZP3 (F)=

REF.	LEV.	PARTS NO.	DESCRIPTION	Q'TY (A)	(B)	(C)	(D)	(E)	(F)	I	R
1	1	119773-91163	IMSTRUMENT PANEL	1	1	1					
2	2	119773-91250	METER, TACHO./HOUR	1	1	1					
3	2	129574-91870	WIRE	3	3	3					
4	2	124617-91980	BULB	12	12	12					
5	2	129574-91210	METER	1	1	1					
6	2	129574-91222	METER	1	1	1					
7	2	129470-91191	BOX ASSY,SW	1	1	1					
8	2	119773-91281	BOX	1	1	1					
9	2	119773-91231	WIRE W/BULB	1	1	1					
10	2	127692-91450	SCREW	2	2	2					
11	2	129170-91650	COVER, BLIND	1	1	1					
12	2	127687-91880	WASHER	6	6	6					
13	2	121575-91250	SWITCH W/KEY	1	1	1					
14	2	123482-91291	KEY, SWITCH	1	1	1					
15	2	119773-91172	WIREHARNESS	1	1	1					
16	3	124617-91990	FUSE (3A)	1	1	1					
17	2	127687-91870	BOLT 6X 35	6	6	6					
18	2	129574-91760	COVER, BLIND	1	1	1					
19	2	129574-91890	WIRE	1	1	1					
20	2	129170-91930	PANEL	1	1	1					
21	2	129574-91620	COVER	1	1	1					
22	2	129574-91420	BRACKET	1	1	1					
23	2	129574-91720	GASKET	1	1	1					
24	2	129574-91630	COVER	2	2	2					
25	2	129574-91430	BRACKET	2	2	2					
26	2	129574-91730	GASKET	2	2	2					
27	2	129574-91640	COVER	1	1	1					
28	2	129574-91440	BRACKET	1	1	1					
29	2	129574-91740	GASKET	1	1	1					
30	2	129170-91610	COVER	1	1	1					
31	2	129574-91710	GASKET	1	1	1					
32	2	129574-91750	GASKET	1	1	1					
33	2	129574-91770	KNOB	2	2	2					
34	2	129574-91650	COVER	1	1	1					
35	2	127692-91410	SCREW	16	16	16					
36	2	127692-91440	SCREW	4	4	4					

N:Old ◄Yes/No► New, Q:Old ◄No/Yes► New, R:Old ◄Yes/Yes► New, S:Old ◄No/No► New, W:Add, Z:Discontinued, F:Interchangeable by set, K:Q'ty Change

(C)Copy Rights YANMAR CO.,LTD.

Fig.54. INSTRUMENT PANEL(D-TYPE,OPTIONAL)

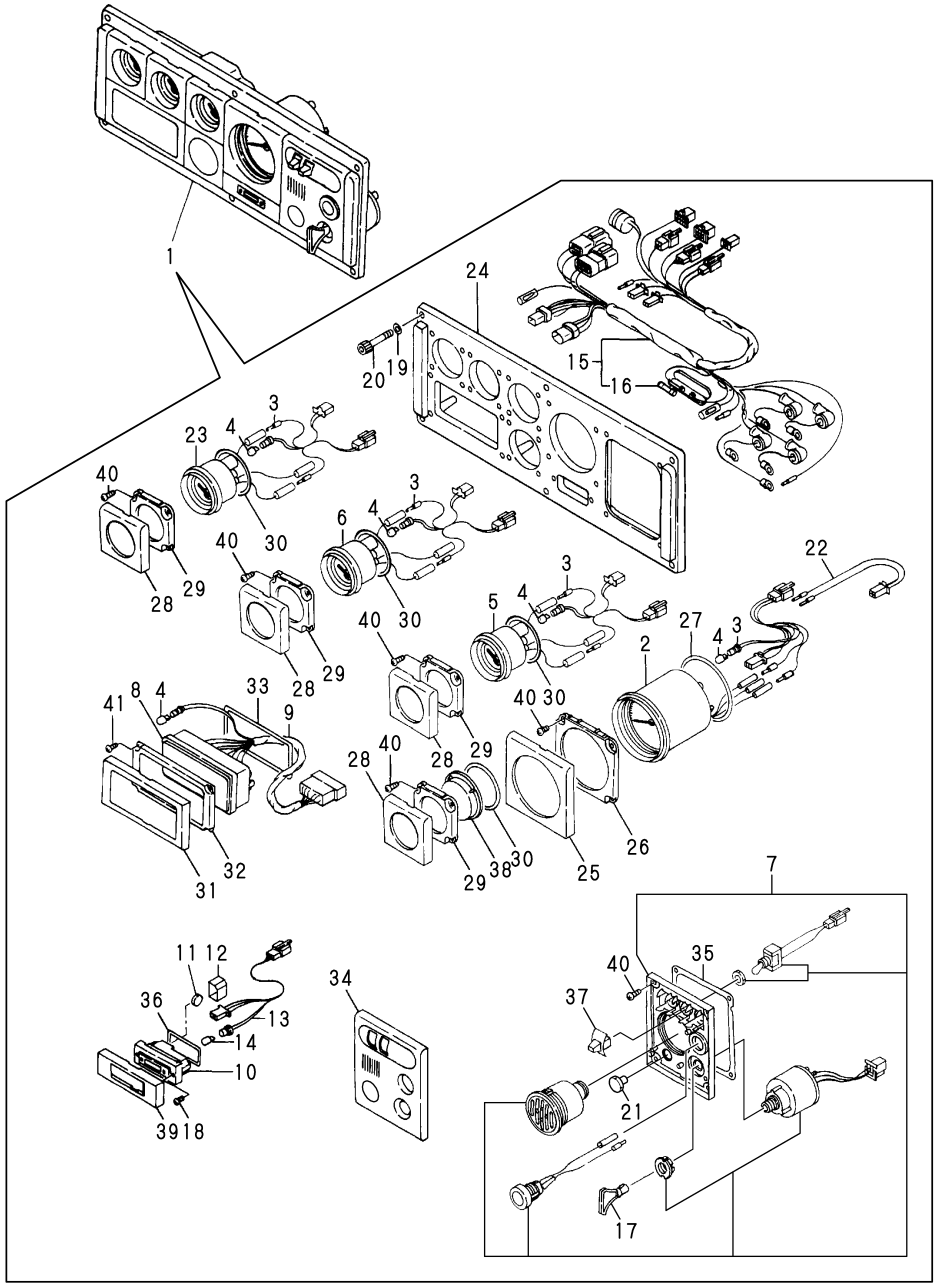

54. INSTRUMENT PANEL(D-TYPE,OPTIONAL)

(A)=6LPA-STP2 (D)=
(B)=6LPA-STZP2 (E)=
(C)=6LPA-STZP3 (F)=

REF.	LEV.	PARTS NO.	DESCRIPTION	Q'TY (A)	(B)	(C)	(D)	(E)	(F)	I	R
1	1	119773-91193	INSTRUMENT PANEL(SI	1	1	1					
2	2	119773-91250	METER, TACHO./HOUR	1	1	1					
3	2	129574-91870	WIRE	4	4	4					
4	2	124617-91980	BULB	13	13	13					
5	2	129574-91210	METER	1	1	1					
6	2	129574-91222	METER	1	1	1					
7	2	129470-91191	BOX ASSY,SW	1	1	1					
8	2	119773-91281	BOX	1	1	1					
9	2	119773-91231	WIRE W/BULB	1	1	1					
10	2	129574-91240	CLOCK	1	1	1					
11	2	127620-91250	CELL	1	1	1					
12	2	129574-91490	HOLDER	1	1	1					
13	2	129574-91880	WIRE W/BULB	1	1	1					
14	2	120147-91760	BULB	1	1	1					
15	2	119773-91221	WIREHARNESS	1	1	1					
16	3	124617-91990	FUSE (3A)	1	1	1					
17	2	123482-91291	KEY, SWITCH	1	1	1					
18	2	127692-91450	SCREW	2	2	2					
19	2	127687-91880	WASHER	6	6	6					
20	2	127687-91870	BOLT 6X 35	6	6	6					
21	2	129574-91760	COVER, BLIND	1	1	1					
22	2	129574-91890	WIRE	1	1	1					
23	2	129574-91311	METER	1	1	1					
24	2	129574-91930	PANEL	1	1	1					
25	2	129574-91620	COVER	1	1	1					
26	2	129574-91420	BRACKET	1	1	1					
27	2	129574-91720	GASKET	1	1	1					
28	2	129574-91630	COVER	4	4	4					
29	2	129574-91430	BRACKET	4	4	4					
30	2	129574-91730	GASKET	4	4	4					
31	2	129574-91640	COVER	1	1	1					
32	2	129574-91440	BRACKET	1	1	1					
33	2	129574-91740	GASKET	1	1	1					
34	2	129170-91610	COVER	1	1	1					
35	2	129574-91710	GASKET	1	1	1					
36	2	129574-91750	GASKET	1	1	1					
37	2	129574-91770	KNOB	2	2	2					
38	2	129574-91600	BLIND	1	1	1					
39	2	129574-91650	COVER	1	1	1					
40	2	127692-91410	SCREW	24	24	24					
41	2	127692-91440	SCREW	4	4	4					

N:Old ←Yes/No→ New, Q:Old ←No/Yes→ New, R:Old ←Yes/Yes→ New, S:Old ←No/No→ New, W:Add, Z:Discontinued, F:Interchangeable by set, K:Q'ty Change

(C)Copy Rights YANMAR CO.,LTD.

Fig.55. WIRE HARNESS & SENSOR

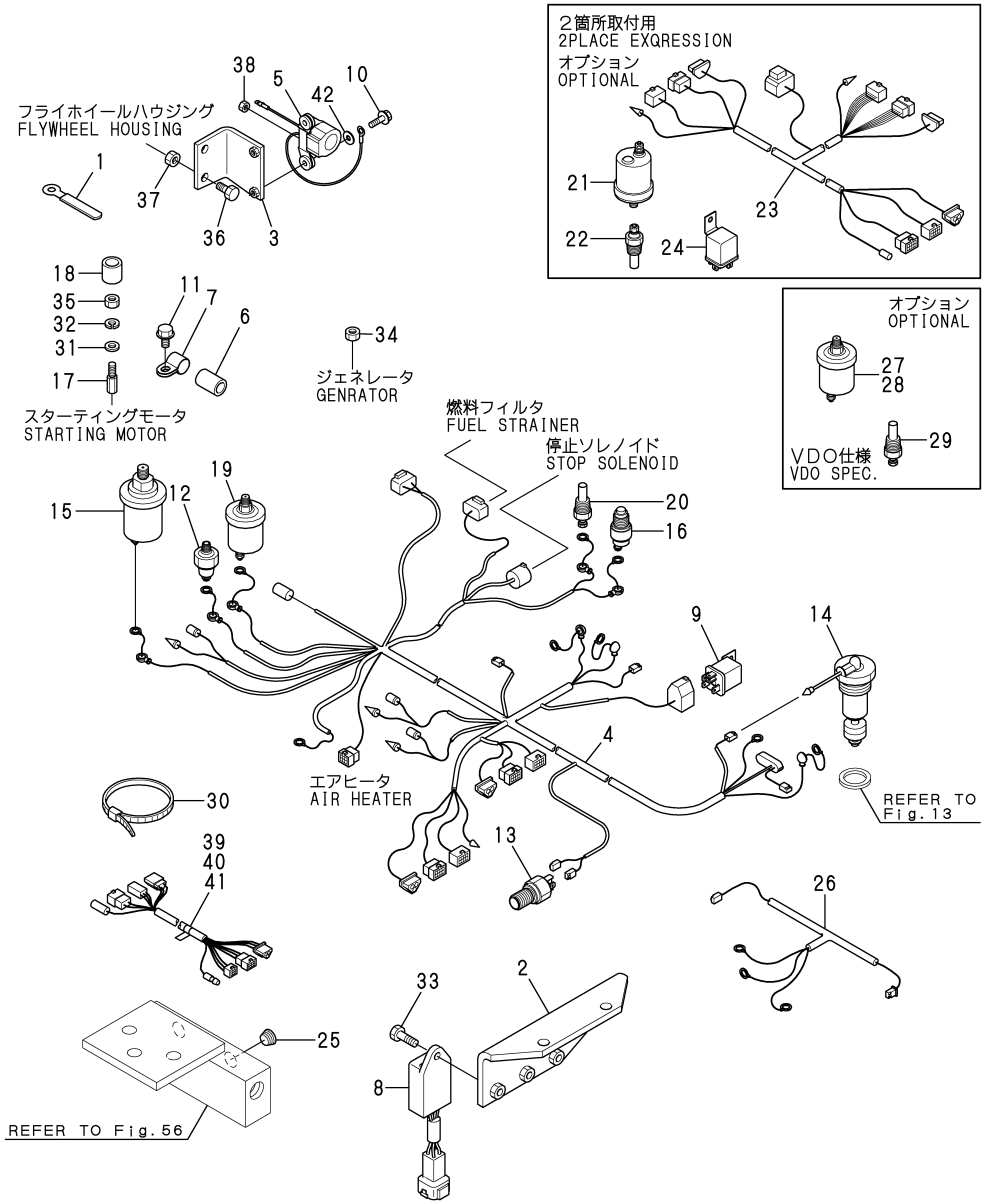

55. WIRE HARNESS & SENSOR

(A)=6LPA-STP2 (D)=
(B)=6LPA-STZP2 (E)=
(C)=6LPA-STZP3 (F)=

REF.	LEV.	PARTS NO.	DESCRIPTION	Q'TY (A)	(B)	(C)	(D)	(E)	(F)	I	R
1	1	105430-67110	CLAMP	1	1	1					
2	1	119773-77551	BRACKET,RELAY	1	1	1					
3	1	119775-77570	BRACKET,RELAY	1	1	1					
4	1	119778-77813	WIRE HARNESS,ENGINE	1	1	1					
5	1	119575-77510	RELAY, STARTER	1	1	1					
6	1	124770-77940	PROTECTOR	1	1	1					
7	1	124070-77950	CLAMP, WIRE	1	1	1					
8	1	119773-91400	TIMER CONTROLER	3	3	3					
9	1	119773-91850	RELAY	1	1	1					
10	1	26106-060202	BOLT M 6X 20 PLATED	2	2	2					
11	1	26106-080162	BOLT M 8X 16 PLATED	1	1	1					
12	1	124060-39452	SENDER,OIL PRESSURE	1	1	1					
13	1	128170-91160	SENSOR, TACHOMETER	1	1	1					
14	1	127610-91221	SWITCH, LEVEL	1	1	1					
15	1	119773-91301	SENSER	1	1	1					
16	1	127610-91350	SWITCH, THERMO	1	1	1					
17	1	119773-77500	BOLT,STARTER	1	1	1					
18	1	119773-77800	COVER, TERMINAL	1	1	1					
19	1	119773-91501	SENDER UNIT	1	1	1					
20	1	144626-91570	SENDER UNIT	1	1	1					
21	1	129574-91561	SENDER UNIT	1	1	1					
22	1	129574-91570	SENDER UNIT	1	1	1					
23	1	129574-77980	HARNESS.	1	1	1					
24	1	119773-91850	RELAY	1	1	1					
25	1	23876-010000	PLUG PT1/8,SCREW	1	1	1					
26	1	119778-91500	WIRE HARNESS		1	1					
27	1	119773-91600	SENDA UNIT	1	1	1					
28	1	119773-91650	SENDA UNIT	1	1	1					
29	1	119773-91700	SENDA UNIT	1	1	1					
30	1	121750-59890	CLAMP 140	5	5	5					
31	1	22117-100000	WASHER 10	1	1	1					
32	1	22217-100000	SPRING WASHER 10	1	1	1					
33	1	26106-060162	BOLT M 6X 16 PLATED	3	3	3					
34	1	26716-060002	NUT 6	1	1	1					
35	1	26716-100002	NUT 10	1	1	1					
36	1	26106-100502	BOLT M10X 50 PLATED	1	1	1					
37	1	26306-100002	NUT	1	1	1					
38	1	26366-060002	NUT M 6	2	2	2					
39	1	129574-77750	HARNESS, WIRE(3.8M	1	1	1					
40	1	129574-77760	HARNESS, WIRE(5.8M	1	1	1					
41	1	129574-77770	HARNESS, WIRE(9.8M	1	1	1					
42	1	183350-55130	WASHER	2	2	2					

N:Old ←Yes/No→ New, Q:Old ←No/Yes→ New, R:Old ←Yes/Yes→ New, S:Old ←No/No→ New, W:Add, Z:Discontinued, F:Interchangeable by set, K:Q'ty Change

(C)Copy Rights YANMAR CO.,LTD.

Fig.56. SENSOR MOUNT

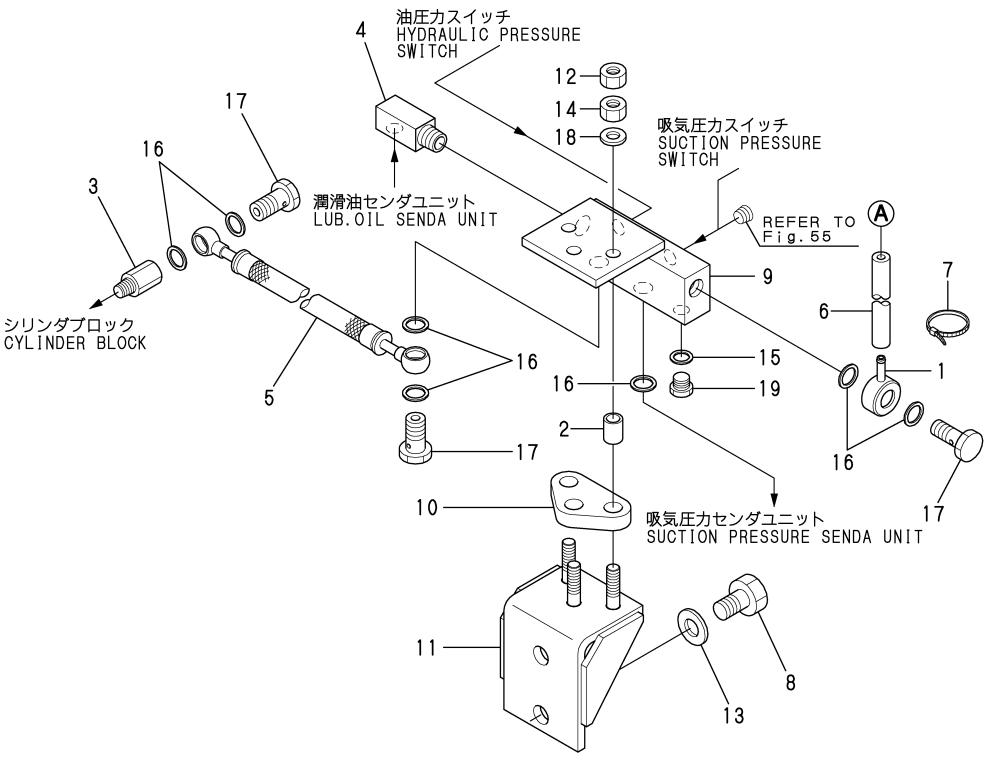

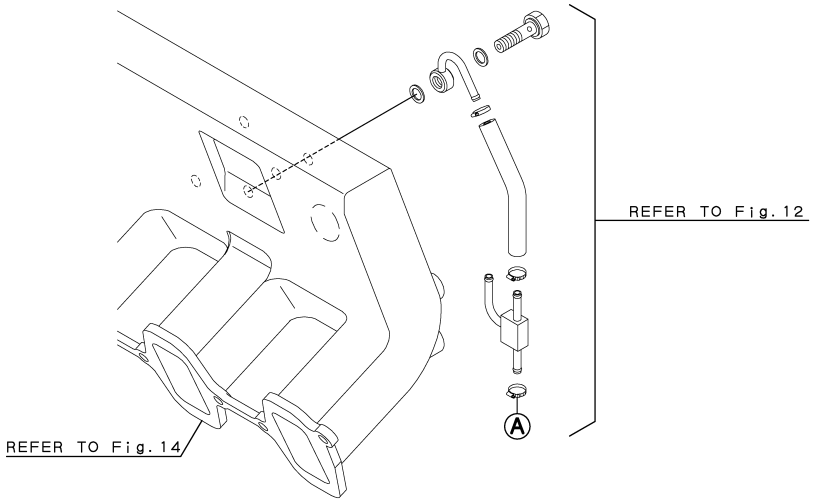

0CR10-G67600

56. SENSOR MOUNT

(A)=6LPA-STP2 (D)=
(B)=6LPA-STZP2 (E)=
(C)=6LPA-STZP3 (F)=

REF.	LEV.	PARTS NO.	DESCRIPTION	Q'TY (A)	(B)	(C)	(D)	(E)	(F)	I	R
1	1	119773-18520	JOINT, PIPE	1	1	1					
2	1	119773-91050	BUSH,SENDER	3	3	3					
3	1	114354-39600	JOINT, PIPE	1	1	1					
4	1	123482-39670	DAMPER	1	1	1					
5	1	119773-39801	PIPE,LUB.OIL	1	1	1					
6	1	129495-59561	PIPE L190	1	1	1					
7	1	121750-59890	CLAMP 140	1	1	1					
8	1	26156-120202	BOLT M12X 20 PLATED	2	2	2					
9	1	119773-91011	BRACKET,SENDER	1	1	1					
10	1	119773-91021	RUBBER DUMPER	1	1	1					
11	1	119773-91040	BRACKET,SENDER	1	1	1					
12	1	26716-080002	NUT M 8	3	3	3					
13	1	22117-120000	WASHER 12	2	2	2					
14	1	26756-080002	LOCK NUT M 8 PLATED	3	3	3					
15	1	23414-100014	PACKING 10,ROUND	1	1	1					
16	1	23414-120000	GASKET 12, ROUND	7	7	7					
17	1	23851-060000	JOINT BOLT 6	3	3	3					
18	1	22137-080000	WASHER 8, POLISHED	3	3	3					
19	1	23887-100002	PLUG 10	1	1	1					

N:Old $\xleftrightarrow[\text{No}]{\text{Yes}}$ New, Q:Old $\xleftrightarrow[\text{Yes}]{\text{No}}$ New, R:Old $\xleftrightarrow[\text{Yes}]{\text{Yes}}$ New, S:Old $\xleftrightarrow[\text{No}]{\text{No}}$ New, W:Add, Z:Discontinued, F:Interchangeable by set, K:Q'ty Change

(C)Copy Rights YANMAR CO.,LTD.

Fig.57. TOOL(OPTIONAL)

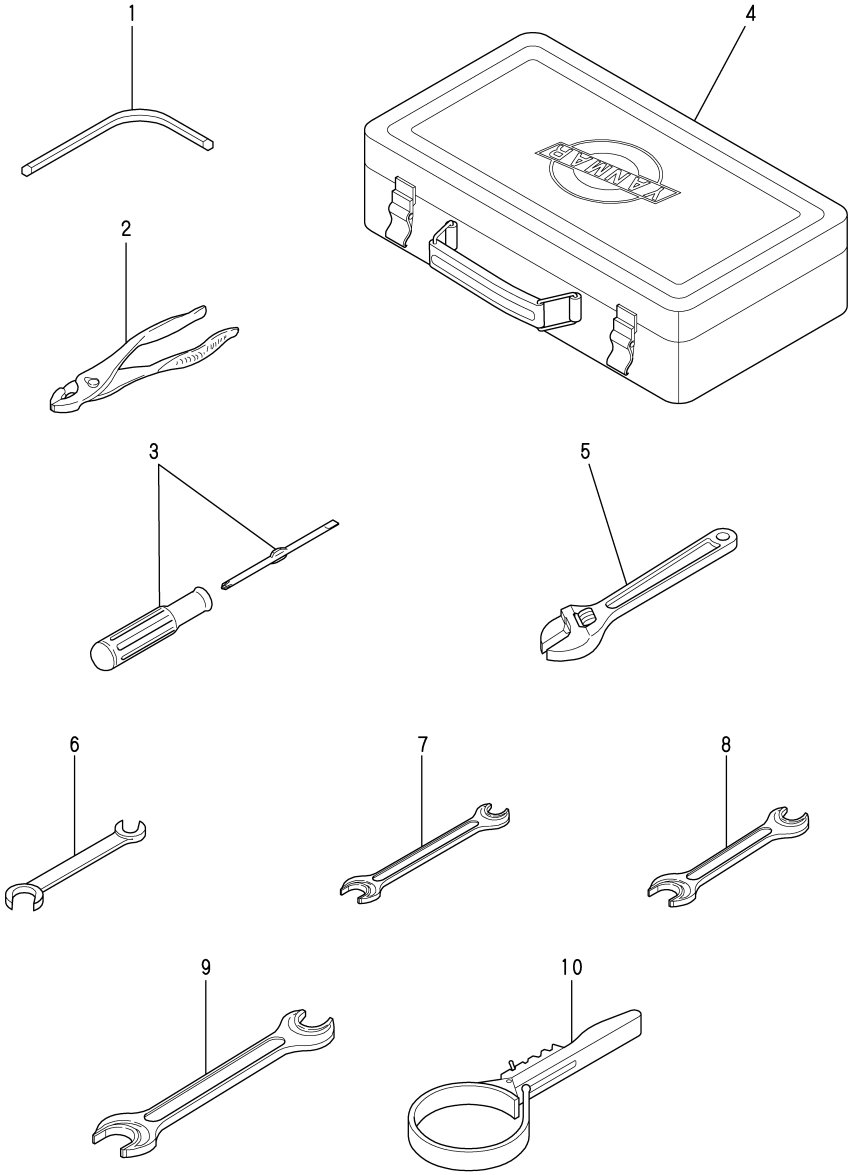

0CR10-G67600

57. TOOL(OPTIONAL)

(A)=6LPA-STP2 (D)=
(B)=6LPA-STZP2 (E)=
(C)=6LPA-STZP3 (F)=

REF.	LEV.	PARTS NO.	DESCRIPTION	Q'TY (A)	(B)	(C)	(D)	(E)	(F)	I	R
1	1	177040-09050	WRENCH	1	1	1					
2	1	189010-92020	PLIER	1	1	1					
3	1	104200-92350	DRIVER, SCREW	1	1	1					
4	1	122210-92601	BOX, SPARES/TOOLS	1	1	1					
5	1	28120-002000	WRENCH 200,ADJUSTABL	1	1	1					
6	1	28110-100130	WRENCH 10X13	1	1	1					
7	1	28110-120140	WRENCH 12X14	1	1	1					
8	1	28110-170190	WRENCH 17X19	1	1	1					
9	1	28110-220240	WRENCH 22X24	1	1	1					
10	1	148633-92350	WRENCH	1	1	1					

N:Old $\frac{\text{Yes}}{\text{No}}$ New, Q:Old $\frac{\text{No}}{\text{Yes}}$ New, R:Old $\frac{\text{Yes}}{\text{Yes}}$ New, S:Old $\frac{\text{No}}{\text{No}}$ New, W:Add, Z:Discontinued, F:Interchangeable by set, K:Q'ty Change

(C)Copy Rights YANMAR CO.,LTD.

Fig.58. SPARE PART(OPTINAL)

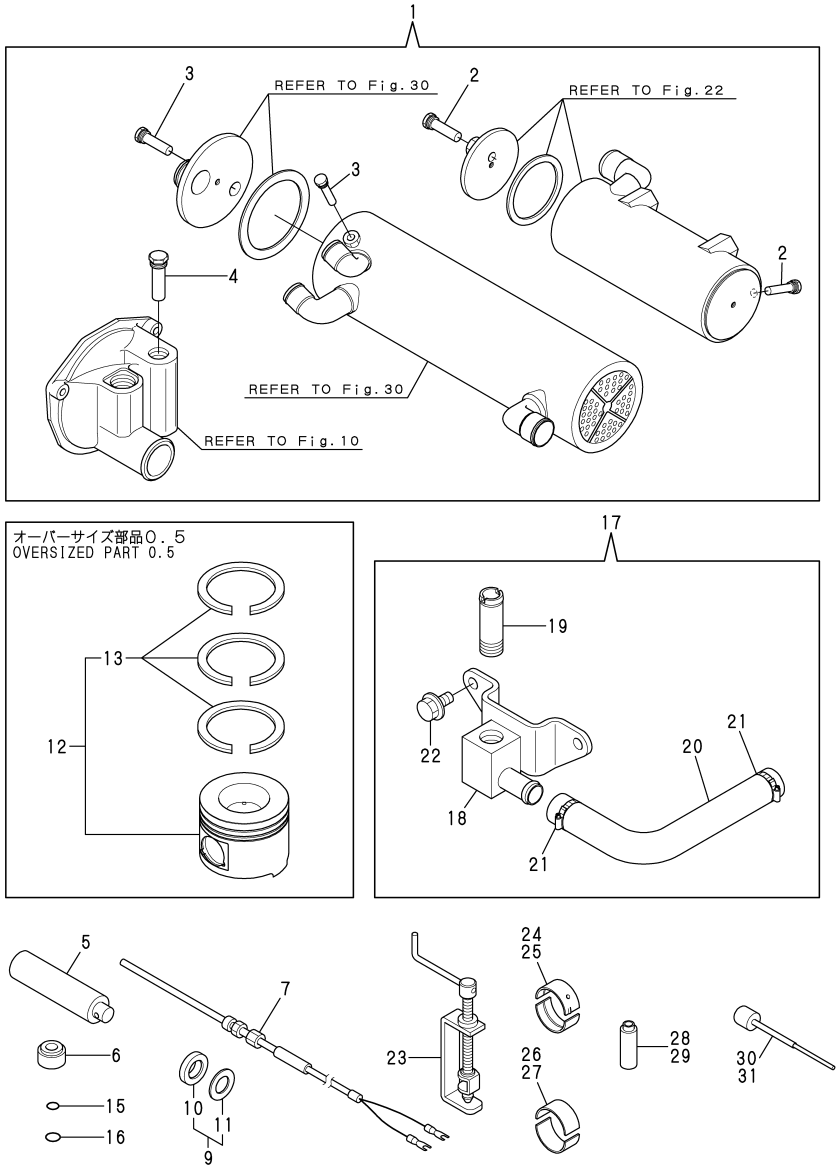

Remarks
(1)NOT ILLUSTRATED.
(2)OVER SIZED(O.S.=0.50)PART 6 SET
(3)UNDER SIZED(U.S.=0.25)PART 7 SET
(4)UNDER SIZED(U.S.=0.50)PART 7 SET

58. SPARE PART(OPTINAL)

(A)=6LPA-STP2 (D)=
(B)=6LPA-STZP2 (E)=
(C)=6LPA-STZP3 (F)=

REF.	LEV.	PARTS NO.	DESCRIPTION	Q'TY (A)	(B)	(C)	(D)	(E)	(F)	I	R
1	1	119773-92600	ZINC KIT	1	1	1					
2	2	119574-44150	ZINC, ANTI-CORROSIVE	2	2	2					
3	2	119574-44150	ZINC, ANTI-CORROSIVE	2	2	2					
4	2	119574-18790	ZINC, ANTI-CORROSIVE	1	1	1					
5	1	119771-02050	HANDLE	1	1	1					
6	1	119775-11340	SEAL, VALVE STEM	12	12	12					
7	1	119773-91800	THERMOCOUPLE	1	1	1					
8	1	119770-02020	TOOL	1	1	1					1
9	1	119773-42510	LIP SEAL KIT(CWS-P	1	1	1					
10	2	119773-42580	LIP SEAL	1	1	1					
11	2	119773-42590	WASHER	1	1	1					
12	1	719775-22110	PISTON ASSY0.5OS6SET	1	1	1					
13	2	119770-01180	RING SET(0.5OS 6SET	1	1	1					2
15	1	119778-26700	O-RING,INPUT-SIDE	1	1	1					
16	1	119778-26710	O-RING,OUTPUT-SIDE	1	1	1					
17	1	119773-49460	JOINT,AIR HEATER	1	1	1					
18	2	119773-49400	JOINT,AIR HEATER	1	1	1					
19	2	119773-49420	JOINT,AIR HEATER	1	1	1					
20	2	119773-49440	HOSE,AIR HEATER	1	1	1					
21	2	23000-028000	CLAMP 28	2	2	2					
22	2	26106-080162	BOLT M 8X 16 PLATED	2	2	2					
23	1	119770-02000	COMPRESSOR,VALVE SPR	1	1	1					
24	1	119770-02031	BEARING, MAIN US0.25	1	1	1					3
25	1	119770-02041	BEARING, MAIN US0.50	1	1	1					4
26	1	119770-02050	BEARING(U/S0.25 6SET	1	1	1					3
27	1	119770-02060	BEARING(U/S0.50 6SET	1	1	1					4
28	1	119771-02010	VALVE GUIDE(12P/SET	1	1	1					
29	1	119771-02020	V-GUIDE(.05) 12P/SET	1	1	1					
30	1	119771-02030	REMOVER(VALVE GUIDE	1	1	1					
31	1	119771-02040	REMOVER(VALVE GUIDE	1	1	1					

N:Old $\frac{\text{Yes}}{\text{No}}$ New, Q:Old $\frac{\text{No}}{\text{Yes}}$ New, R:Old $\frac{\text{Yes}}{\text{Yes}}$ New, S:Old $\frac{\text{No}}{\text{No}}$ New, W:Add, Z:Discontinued, F:Interchangeable by set, K:Q'ty Change

(C)Copy Rights YANMAR CO.,LTD.

Fig.59. EXHAUST BEND(ZT350 SPEC)

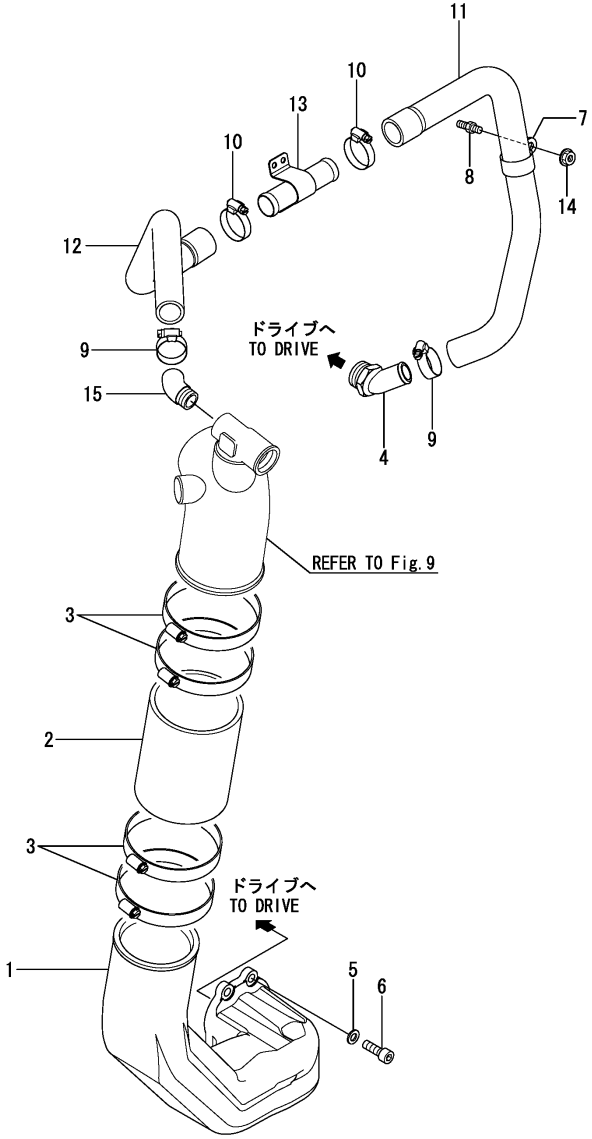

0CR10-G67600

59. EXHAUST BEND(ZT350 SPEC)

(A)=6LPA-STP2 (D)=
(B)=6LPA-STZP2 (E)=
(C)=6LPA-STZP3 (F)=

REF.	LEV.	PARTS NO.	DESCRIPTION	Q'TY (A)	(B)	(C)	(D)	(E)	(F)	I	R
1	1	119779-13640	EXHAUST PIPE		1	1					
2	1	119175-13800	JOINT, RUBBER		1	1					
3	1	119172-48010	CLIP, HOSE		4	4					
4	1	119779-49550	ELBOW,SEA WATER		1	1					
5	1	22113-100000	WASHER, 10		4	4					
6	1	26453-100302	BOLT, 10 X 30		4	4					
7	1	127610-03270	RETAINER		1	1					
8	1	114973-13950	BOLT, MUFFLER STAY		1	1					
9	1	119172-48350	CLIP, HOSE		2	2					
10	1	119172-48410	CLIP, HOSE		2	2					
11	1	119779-49120	HOSE, DRIVE IN		1	1					
12	1	119779-49130	HOSE, BYPASS		1	1					
13	1	119778-49200	TUBE, DRIVE		1	1					
14	1	26306-080002	NUT, 8		1	1					
15	1	119175-49550	BEND		1	1					

N:Old $\frac{\text{Yes}}{\text{No}}$ New, Q:Old $\frac{\text{No}}{\text{Yes}}$ New, R:Old $\frac{\text{Yes}}{\text{Yes}}$ New, S:Old $\frac{\text{No}}{\text{No}}$ New, W:Add, Z:Discontinued, F:Interchangeable by set, K:Q'ty Change

(C)Copy Rights YANMAR CO.,LTD.

Fig.60. C.S.W.PIPE(ZT350 SPEC)

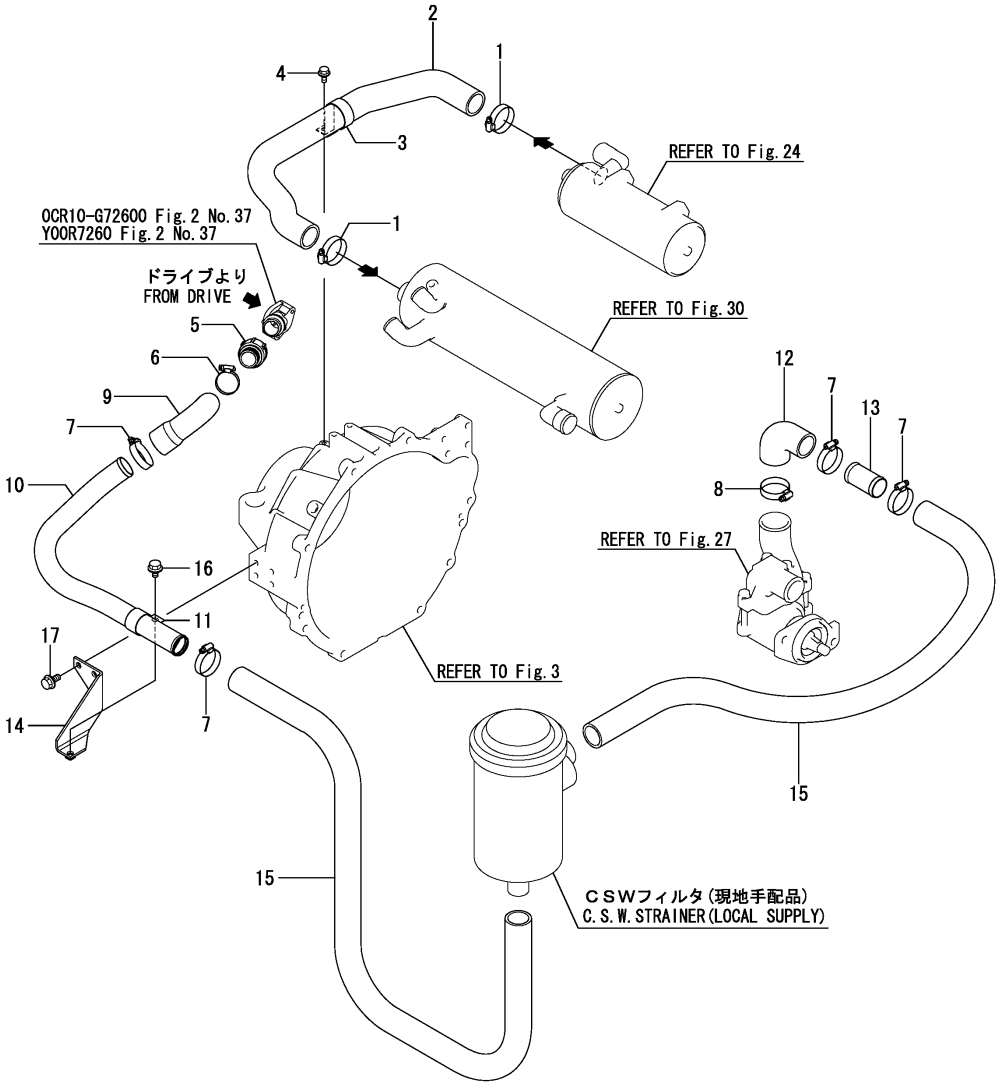

0CR10-G67600

60. C.S.W.PIPE(ZT350 SPEC)

(A)=6LPA-STP2 (D)=
(B)=6LPA-STZP2 (E)=
(C)=6LPA-STZP3 (F)=

REF.	LEV.	PARTS NO.	DESCRIPTION	Q'TY (A)	(B)	(C)	(D)	(E)	(F)	I	R
1	1	119172-48480	CLIP, HOSE		2	2					
2	1	119779-49530	CWS-T(LO COOLER OUT		1	1					
3	1	119779-49540	CLAMP(CWS-T		1	1					
4	1	26106-080182	BOLT, 8 X 18		1	1					
5	1	120650-42630	JOINT, SEAWATER QUIC		1	1					
6	1	119172-48410	CLIP, HOSE		1	1					
7	1	119172-48480	CLIP, HOSE		4	4					
8	1	119172-48540	CLIP, HOSE		1	1					
9	1	119779-49190	HOSE, DRIVE OUT		1	1					
10	1	119779-49200	CW-T(DRIVE-SWP		1	1					
11	1	119779-49210	CLAMP(CW-T		1	1					
12	1	119779-49220	HOSE, SWP IN		1	1					
13	1	119779-49230	PIPE, SWP IN		1	1					
14	1	119779-49710	BRACKET(CW-T		1	1					
15	1	119779-49910	HOSE,SEA WATER 2.5M		1	1					
16	1	26106-100162	BOLT, 10 X 16		1	1					
17	1	26106-100222	BOLT, 10 X 22		3	3					

N:Old ◄Yes/No► New, Q:Old ◄No/Yes► New, R:Old ◄Yes/Yes► New, S:Old ◄No/No► New, W:Add, Z:Discontinued, F:Interchangeable by set, K:Q'ty Change

(C)Copy Rights YANMAR CO.,LTD.

Fig.61. COUPLING(ZT350 SPEC)

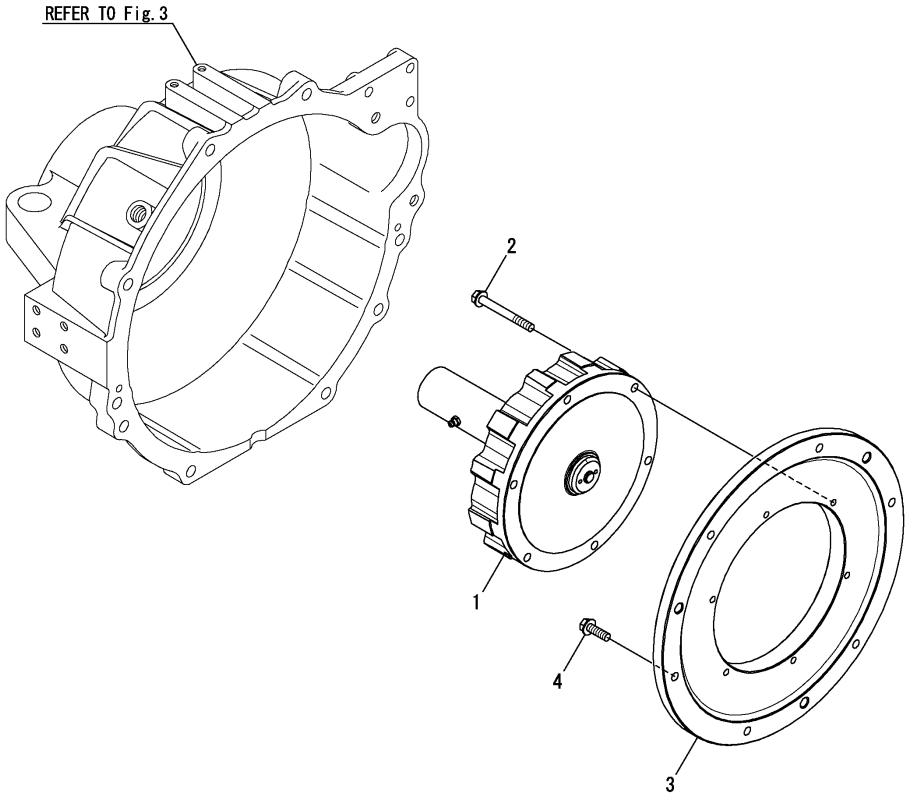

0CR10-G67600

61. COUPLING(ZT350 SPEC)

(A)=6LPA-STP2 (D)=
(B)=6LPA-STZP2 (E)=
(C)=6LPA-STZP3 (F)=

	REF.	LEV.	PARTS NO.	DESCRIPTION	Q'TY (A)	(B)	(C)	(D)	(E)	(F)	I	R
I	1	1	120661-81050	COUPLING CF-RSD-106		1	1				W	
			(B=*2009.02)	(C=*2009.02)								
I	2	1	26106-080702	BOLT M 8X 70 PLATED		6	6				W	
			(B=*2009.02)	(C=*2009.02)								
I	3	1	119779-21510	SPACER, CF-RSD106		1	1				W	
			(B=*2009.02)	(C=*2009.02)								
I	4	1	119005-77350	BOLT (M8 X L25)		6	6				W	
			(B=*2009.02)	(C=*2009.02)								

N:Old $\xleftarrow[\text{No}]{\text{Yes}}$ New, Q:Old $\xleftarrow[\text{Yes}]{\text{No}}$ New, R:Old $\xleftarrow[\text{Yes}]{\text{Yes}}$ New, S:Old $\xleftarrow[\text{No}]{\text{No}}$ New, W:Add, Z:Discontinued, F:Interchangeable by set, K:Q'ty Change

(C)Copy Rights YANMAR CO.,LTD.

Part Number Index

All parts are stipulated in the order of part numbers.
(Depending on the area in which the part is used.)
This index will display the location of the part according to each part number.

MODEL : 6LPA-STP2/STZP2,3
PC NO : 0CR10-G67600

PARTS No. INDEX

PARTS No.	Fig.	Ref.No.
104200-92350	57	3
104264-59030	8	41
105430-67110	55	1
114354-39600	56	3
114973-13950	9	16
	59	8
119005-77350	19	5
	61	4
119172-07540	6	18
119172-48010	9	23
	59	3
119172-48130	8	27
	12	4
	13	23
	38	25
119172-48190	7	11
	46	5
	47	14
119172-48250	7	12
	34	5
	47	15
119172-48280	25	7
119172-48350	9	21
	59	9
119172-48410	9	22
	31	20
	32	19
	59	10
	60	6
119172-48480	31	7
		10
		19
		29
		30
	32	9
		20
		29
	33	9
	60	1
		7
119172-48540	31	8
		12
		13
		24
	32	10
		14
		21
	60	8
119175-13301	9	34
119175-13320	9	35

PARTS No.	Fig.	Ref.No.
119175-13700	9	30
119175-13800	9	15
	59	2
119175-33320	22	21
119175-33330	22	22
119175-33340	22	19
119175-33350	22	20
119175-33360	22	23
119175-33370	22	24
119175-33390	22	25
119175-42620	27	8
119175-49550	9	20
	59	15
119187-49321	34	7
119574-18250	11	2
119574-18700	11	3
119574-18790	10	7
	58	4
119574-18910	11	5
119574-44150	22	2
		26
	30	2
	42	2
	46	13
	58	2
		3
119574-44180	22	3
	30	4
119574-44560	13	15
119574-44600	30	9
119574-44621	30	10
119575-77050	43	1
119575-77510	55	5
119578-77140	43	3
119578-77680	51	5
119578-91351	51	6
119593-18480	13	19
119593-18800	11	4
119593-18880	8	30
119593-39450	43	11
	47	8
119593-39690	25	4
119593-49080	9	39
	31	5
		22
	32	5
		12
		27
119595-44600	13	21
119620-49290	10	23

PARTS No.	Fig.	Ref.No.
119620-49290	22	12
	30	11
119770-00030	2	30
119770-00040	15	12
119770-00070	15	14
119770-00110	1	3
119770-00130	18	5
119770-00160	2	3
119770-00201	2	27
119770-00230	5	2
119770-00250	20	2
119770-00260	20	4
119770-00270	20	5
119770-00280	20	6
119770-00292	18	2
119770-00300	18	8
119770-00310	18	9
119770-00320	18	13
119770-00340	17	3
119770-00360	18	28
119770-00381	18	29
119770-00410	17	38
119770-00420	17	34
119770-00430	17	35
119770-00440	17	36
119770-00620	5	9
119770-00630	5	10
119770-00651	21	2
119770-00660	21	3
119770-00670	23	5
119770-00680	23	8
119770-00692	23	9
119770-00710	23	10
119770-00730	28	2
119770-00740	28	3
119770-00750	28	8
119770-00781	38	12
119770-00910	39	11
119770-00920	39	12
119770-01010	20	4 A
119770-01020	20	4 B
119770-01030	20	4 C
119770-01040	20	4 D
119770-01180	20	14
	58	13
119770-01200	5	14
119770-01210	2	7
	27	27
119770-01220	2	8
119770-01230	15	5

PARTS No.	Fig.	Ref.No.
119770-01240	2	34
119770-01250	2	35
119770-01260	2	36
119770-02000	58	23
119770-02010	20	11
119770-02020	58	8
119770-02031	18	30
	58	24
119770-02041	18	31
	58	25
119770-02050	20	15
	58	26
119770-02060	20	16
	58	27
119770-90020	2	23
119770-90070	15	7
119770-90080	15	9
119770-90090	2	31
119770-90100	2	32
119770-90110	15	15
119770-90160	18	19
119770-90250	2	6
119770-90260	23	11
119770-90270	2	11
119770-90280	2	12
119770-90290	2	13
119770-90320	2	18
119770-90330	2	19
119770-90350	2	28
119770-90370	5	3
119770-90380	5	4
		11
119770-90390	5	5
		12
119770-90400	5	6
119770-90410	5	7
119770-90440	18	3
119770-90450	18	10
119770-90460	18	11
119770-90470	18	14
119770-90480	18	15
119770-90490	18	16
119770-90500	18	17
119770-90510	17	4
119770-90520	18	20
119770-90530	18	21
119770-90540	18	22
119770-90550	18	23
119770-90560	17	37
119770-90611	5	13

MODEL : 6LPA-STP2/STZP2,3
PC NO : 0CR10-G67600

PARTS No. INDEX

PARTS No.	Fig.	Ref.No.
119770-90620	23	2
119770-90630	14	7
	21	4
	23	15
	28	4
119770-90650	23	16
119770-90660	23	17
119770-90670	23	18
	38	19
119770-90680	23	19
119770-90690	23	20
119770-90700	23	21
119770-90710	23	22
119770-90720	23	23
119770-90730	23	24
119770-90740	14	5
	23	25
119770-90750	23	26
119770-90800	28	5
119770-90810	28	6
119770-90860	14	6
119770-90890	37	16
119770-90900	37	17
119770-90930	38	20
	42	8
119770-90960	39	14
119770-90990	1	4
119770-91020	5	15
119770-91040	17	39
119770-91050	28	9
119771-00012	15	2
119771-00031	15	18
119771-00041	15	13
119771-00051	17	6
119771-00060	2	2
119771-00071	2	14
119771-00081	2	17
119771-00101	2	22
119771-00131	18	24
119771-00141	18	25
119771-00151	18	26
119771-00160	18	27
119771-00170	17	27
119771-00190	17	29
119771-00201	17	30
119771-00211	17	8
119771-00221	17	9
119771-00230	17	10
119771-00240	17	13
119771-00250	17	17

PARTS No.	Fig.	Ref.No.
119771-00261	17	18
119771-00271	17	19
119771-00280	17	20
119771-00290	17	21
119771-00320	1	6
119771-00330	1	8
119771-00340	38	21
119771-00351	38	8
119771-00360	38	9
119771-00370	38	10
119771-00390	39	10
119771-00401	15	10
119771-00411	15	10 A
119771-00421	15	10 B
119771-00430	17	28
119771-00440	16	2
119771-00450	17	2
119771-01270	2	37
119771-02010	15	19
	58	28
119771-02020	15	20
	58	29
119771-02030	58	30
119771-02040	58	31
119771-02050	58	5
119771-10040	1	1
119771-90050	15	4
119771-90060	15	3
119771-90070	15	8
119771-90080	15	16
119771-90110	2	4
119771-90120	2	5
		24
119771-90130	2	15
119771-90140	2	10
119771-90160	2	25
119771-90170	17	31
119771-90180	17	32
119771-90190	17	11
119771-90200	17	14
119771-90210	17	15
119771-90230	17	23
119771-90240	17	24
119771-90250	17	25
119771-90260	23	13
119771-90290	38	13
119771-90300	38	14
119771-90310	38	15
119771-90320	38	16
119771-90330	38	17

PARTS No.	Fig.	Ref.No.
119771-90340	39	13
119771-90350	20	10
119773-01580	2	39
119773-01590	2	20
119773-01600	3	1
119773-03011	7	1
119773-03021	7	2
119773-03031	7	3
119773-03190	7	6
119773-03200	7	7
119773-03251	7	9
119773-03271	7	10
119773-03301	7	8
119773-07210	16	3
119773-07280	6	3
119773-07350	6	5
119773-08200	4	3
119773-08250	48	1
119773-08300	4	8
119773-08310	4	12
119773-08330	4	9
		13
119773-08340	4	10
		14
119773-08350	4	11
		15
119773-13010	13	10
119773-13100	13	1
119773-13160	13	3
119773-13200	13	4
119773-13250	9	1
		10
		25
119773-13300	9	2
		11
		27
119773-13501	9	12
119773-18100	10	1
119773-18121	10	22
119773-18160	10	11
119773-18181	10	12
119773-18210	11	1
119773-18250	8	28
119773-18320	10	5
119773-18330	10	4
119773-18340	10	3
119773-18350	10	6
119773-18360	10	10
119773-18410	10	14
119773-18520	56	1

PARTS No.	Fig.	Ref.No.
119773-18530	12	1
119773-18540	12	2
119773-18560	12	3
119773-18701	8	25
119773-18730	8	26
119773-18850	8	29
119773-21510	19	4
119773-28010	19	1
119773-28600	19	3
119773-33050	22	7
119773-33060	22	6
119773-33070	22	4
119773-33080	22	5
119773-34400	5	28
119773-34600	5	23
119773-34621	5	24
119773-34770	5	25
119773-34810	5	16
119773-34821	5	22
119773-34950	5	27
119773-39610	25	2
119773-39671	25	3
119773-39801	56	5
119773-39820	25	5
119773-42500	27	1
119773-42510	58	9
119773-42520	27	21
119773-42550	27	4
119773-42570	27	6
119773-42580	58	10
119773-42590	58	11
119773-42600	27	7
119773-42650	27	2
119773-44011	30	1
119773-44051	30	3
119773-44060	30	7
119773-44071	30	5
119773-44080	30	6
119773-44150	30	8
119773-44450	33	1
119773-44500	13	20
119773-49030	31	28
119773-49090	31	18
119773-49110	33	2
119773-49140	33	4
119773-49180	31	32
119773-49200	33	7
119773-49250	34	1
119773-49280	34	3
119773-49300	34	9

MODEL : 6LPA-STP2/STZP2,3
PC NO : 0CR10-G67600

PARTS No. INDEX

PARTS No.	Fig.	Ref.No.
119773-49320	34	10
119773-49350	34	4
119773-49400	58	18
119773-49420	58	19
119773-49440	58	20
119773-49460	58	17
119773-49540	29	1
119773-49550	29	2
119773-49570	29	3
119773-49990	34	8
119773-51810	37	11
119773-51910	37	3
119773-51920	37	4
119773-51930	37	5
	38	30
119773-51940	37	6
119773-51960	37	8
119773-51970	37	9
119773-51980	37	10
119773-55620	41	12
119773-55700	41	1
119773-55710	41	3
119773-55760	42	3
	46	14
119773-55770	42	9
119773-55830	42	1
119773-55870	42	10
	46	15
119773-55890	42	11
	46	16
119773-59101	40	1
119773-59123	42	4
119773-67101	44	2
119773-67150	44	3
119773-67220	44	4
119773-77010	49	1
119773-77030	49	49
119773-77200	50	1
119773-77320	50	31
119773-77340	45	5
	50	32
119773-77350	50	33
119773-77500	55	17
119773-77551	55	2
119773-77800	55	18
119773-85500	48	5
119773-85520	48	4
119773-85550	48	2
119773-91011	56	9
119773-91021	56	10

PARTS No.	Fig.	Ref.No.
119773-91040	56	11
119773-91050	56	2
119773-91132	52	1
119773-91141	52	13
119773-91163	53	1
119773-91172	53	15
119773-91193	54	1
119773-91221	54	15
119773-91231	53	9
	54	9
119773-91240	52	6
119773-91250	52	2
	53	2
	54	2
119773-91261	52	5
119773-91281	53	8
	54	8
119773-91301	55	15
119773-91400	55	8
119773-91501	55	19
119773-91600	55	27
119773-91650	55	28
119773-91700	55	29
119773-91800	58	7
119773-91850	55	9
		24
119773-92600	58	1
119775-01650	3	5
119775-01670	3	6
119775-03150	7	5
119775-07251	6	11
119775-07280	6	19
119775-07420	6	10
119775-07520	6	21
119775-08101	4	1
119775-08111	4	2
119775-08210	4	4
119775-08220	4	7
119775-08230	4	16
119775-11340	17	41
	58	6
119775-12102	14	2
119775-12150	14	3
119775-18150	8	1
119775-22160	20	8
119775-28500	19	2
119775-33000	22	1
		15
119775-33060	22	17
119775-33070	22	18

PARTS No.	Fig.	Ref.No.
119775-33100	22	16
119775-33151	22	8
119775-33170	22	9
119775-33200	22	10
119775-33650	22	11
119775-35060	23	30
119775-35080	23	28
119775-39121	24	1
119775-39141	24	2
119775-48640	31	4
	32	1
		30
119775-49010	31	1
	32	2
119775-49020	31	27
119775-49040	31	3
	32	26
119775-49060	31	2
	32	3
119775-49080	31	17
119775-49090	31	16
119775-49120	33	3
119775-49150	33	6
119775-49160	31	11
	32	16
119775-49170	31	31
119775-49220	33	8
119775-49260	34	2
119775-49360	31	14
119775-49370	31	15
119775-49750	31	9
119775-51950	37	7
119775-51980	37	1
119775-53180	38	2
119775-53181	38	2 -1
119775-53280	38	3
119775-53290	38	4
119775-53291	38	4 -1
119775-53920	38	6
119775-55600	41	11
119775-59310	39	3 -1
119775-59320	39	4 -1
119775-59330	39	5 -1
119775-59340	39	6 -1
119775-59350	39	7 -1
119775-59360	39	8 -1
119775-59540	38	22
119775-59551	38	23
119775-59560	38	24
119775-59803	39	3

PARTS No.	Fig.	Ref.No.
119775-59813	39	4
119775-59823	39	5
119775-59833	39	6
119775-59843	39	7
119775-59853	39	8
119775-77070	43	2
119775-77260	50	30
119775-77450	51	1
119775-77460	51	2
119775-77470	51	3
119775-77490	51	4
119775-77570	55	3
119775-77640	43	4
119775-77850	43	5
119775-77860	43	6
119778-07500	6	9
119778-08310	3	3
119778-08350	3	4
119778-08502	4	18
119778-13301	9	3
119778-13311	9	4
119778-13330	9	6
119778-13370	9	7
119778-13550	9	28
119778-13640	9	37
119778-13650	9	45
119778-21510	19	6
119778-26400	47	1
119778-26410	47	2
119778-26500	45	1
119778-26511	41	17
119778-26620	46	1
119778-26650	47	3
119778-26660	47	4
119778-26670	40	8
	47	12
119778-26700	47	5
	58	15
119778-26710	47	6
	58	16
119778-26750	46	2
119778-26800	47	7
119778-48620	9	38
119778-49040	9	44
119778-49070	9	17
119778-49080	9	18
119778-49200	9	19
	32	18
	59	13
119778-49780	31	23

MODEL : 6LPA-STP2/STZP2,3
PC NO : 0CR10-G67600

PARTS No. INDEX

PARTS No.	Fig.	Ref.No.
119778-49780	32	13
119778-49800	9	41
	31	25
	32	22
119778-67200	13	31
119778-67201	13	31 -1
119778-77813	55	4
119778-85500	48	8
119778-91500	55	26
119779-01610	3	2
119779-01611	3	2 -1
119779-07430	6	17
119779-08101	4	19
119779-08111	4	20
119779-08350	3	11
119779-13640	59	1
119779-21510	61	3
119779-26551	45	3
119779-48620	9	38 -1
	32	25
119779-49040	9	44 -1
	32	28
119779-49050	32	4
119779-49090	32	6
119779-49100	32	7
119779-49120	59	11
119779-49130	59	12
119779-49150	32	15
119779-49160	32	15 -1
119779-49170	32	17
119779-49190	60	9
119779-49200	60	10
119779-49210	60	11
119779-49220	60	12
119779-49230	60	13
119779-49300	45	4
119779-49530	60	2
119779-49540	60	3
119779-49550	59	4
119779-49590	32	8
119779-49710	60	14
119779-49910	60	15
119787-26100	45	13
119787-26520	46	7
119787-26540	45	2
119787-26550	47	10
119787-26561	47	11
119787-42550	27	14
119787-42570	27	3
		15

PARTS No.	Fig.	Ref.No.
120130-39990	26	2
120147-91760	54	14
120324-07240	6	1
120445-44640	13	7
		22
120650-42630	32	32
	60	5
120661-81050	61	1
121236-77340	50	29
121250-49110	42	12
	46	3
121252-39150	25	1
121575-91250	53	13
121750-59890	40	7
	55	30
	56	7
121855-59880	40	2
122210-92601	57	4
123482-39670	56	4
123482-91291	52	11
	53	14
	54	17
123658-18910	8	32
123682-07852	6	7
124060-39452	55	12
124070-77950	55	7
124413-39100	26	1
124616-91370	43	7
124617-91980	52	4
	53	4
	54	4
124617-91990	52	14
	53	16
	54	16
124770-77940	55	6
124790-44560	13	16
127610-03150	46	12
127610-03270	9	36
	59	7
127610-91221	55	14
127610-91350	55	16
127616-11960	13	18
127620-91250	54	11
127672-07100	6	20
127687-91870	52	7
	53	17
	54	20
127687-91880	52	16
	53	12
	54	19

PARTS No.	Fig.	Ref.No.
127688-77340	44	14
127692-91410	52	30
	53	35
	54	40
127692-91440	52	10
	53	36
	54	41
127692-91450	52	12
	53	10
	54	18
127695-49430	8	35
128170-13600	9	29
128170-86501	44	12
128170-91160	55	13
128296-07190	6	12
128296-07260	6	2
128296-07300	6	4
128296-07360	6	6
128296-07400	6	13
128296-07420	6	14
128296-07450	6	15
128296-07460	6	16
128391-91440	52	23
128391-91640	52	22
128391-91700	52	15
128391-91740	52	24
128391-91930	52	18
129107-44590	13	6
129170-91610	52	25
	53	30
	54	34
129170-91650	52	8
	53	11
129170-91930	53	20
129171-44600	13	5
129198-59540	12	5
129470-91191	52	9
	53	7
	54	7
129495-59561	56	6
129574-77750	55	39
129574-77760	55	40
129574-77770	55	41
129574-77980	55	23
129574-91210	53	5
	54	5
129574-91222	53	6
	54	6
129574-91240	54	10
129574-91311	54	23

PARTS No.	Fig.	Ref.No.
129574-91420	52	20
	53	22
	54	26
129574-91430	53	25
	54	29
129574-91440	53	28
	54	32
129574-91490	54	12
129574-91561	55	21
129574-91570	55	22
129574-91600	54	38
129574-91620	52	19
	53	21
	54	25
129574-91630	53	24
	54	28
129574-91640	53	27
	54	31
129574-91650	52	29
	53	34
	54	39
129574-91710	52	26
	53	31
	54	35
129574-91720	52	21
	53	23
	54	27
129574-91730	53	26
	54	30
129574-91740	53	29
	54	33
129574-91750	52	27
	53	32
	54	36
129574-91760	52	17
	53	18
	54	21
129574-91770	52	28
	53	33
	54	37
129574-91870	52	3
	53	3
	54	3
129574-91880	54	13
129574-91890	53	19
	54	22
129574-91930	54	24
129670-42520	27	5
144626-91570	55	20
148633-92350	57	10

MODEL : 6LPA-STP2/STZP2,3
PC NO : 0CR10-G67600

PARTS No. INDEX

PARTS No.	Fig.	Ref.No.
160870-78700	44	15
177040-09050	57	1
177523-80110	48	11
177523-80120	48	12
177523-80130	48	13
183350-55130	55	42
189010-92020	57	2
194250-51660	47	9
		13
196346-34860	46	8
196630-12980	6	8
41710-000410	44	10
41710-001300	44	11
41730-000681	44	13
43230-556830	13	13
43530-500610	27	19
43662-030031	27	20
719775-22110	20	12
	58	12
977780-01200	36	1
977780-01210	35	1
977780-01230	35	2
	36	2
977780-01240	36	3
977780-01250	35	3
977780-03000	35	9
	36	9
X0044021509	35	7
	36	7
X0210416680	50	2
X0212005000	50	9
X0214006030	50	4
X0214110570	50	6
X0215016550	50	13
X0215060070	50	11
X0215420160	50	12
X0215512260	50	22
X0215804510	50	14
X0216025230	50	28
X0216051970	50	17
X0216052070	50	23
X0216202720	50	15
X0216260190	50	18
X0216260250	50	19
X0225002201	13	14
X0280210250	49	11
X0280625790	49	26
X0280630030	49	28
X0280650250	49	16
X0281003001	49	2

PARTS No.	Fig.	Ref.No.
X0282001780	49	3
X0283005381	49	7
X0283060070	49	27
X0283270160	49	10
X0283270171	49	24
X0283711500	49	23
X0283716640	49	14
X0283810071	49	13
X0285017860	49	22
X0285100500	49	21
X0534040240	49	18
X0534497181	49	44
X0534497510	49	45
X0535050290	49	17
X0535117630	49	41
X0535137770	49	46
X0536600443	49	20
X0536807770	49	48
X0719005370	41	5
X0719240010	41	7
X0860620180	41	10
X0861001400	41	2
X0862202820	41	8
X0932490090	38	5
X0960200180	38	31
X1260001940	50	16
X1280995160	49	6
X1280995610	49	40
X1284018620	49	37
X1534002321	49	15
X179100011X	36	5
X179100021X	35	5
X179100100X	35	6
	36	6
X199903800X	35	8
	36	8
X211810030	10	8
X214320104	10	9
X8636008003	35	4
	36	4
X9017010061	49	29
X9025810001	49	47
X9080210070	41	6
X9080240360	41	4
X9147005121	41	9
X9490065080	49	36
X9490065460	50	20
X9490065590	50	7
X9490066401	50	27
X9490075110	50	21

PARTS No.	Fig.	Ref.No.
X9490076280	50	26
X9490076530	49	33
X9490076850	49	39
X9490119320	49	43
X9490200600	49	25
X9490423741	49	31
X9490432000	50	8
X9490441912	49	32
X9490474440	49	19
X9490505650	49	42
X9490562481	50	24
X9490562520	50	3
X9490563080	50	25
X9490564480	49	30
X9490721120	49	12
X9490721130	49	9
X9491001750	49	5
X9491001930	49	4
X9491002790	50	10
X9491004370	50	5
X9491200240	49	35
X9491704030	49	8
X9491704040	49	38
X9491704070	49	34
XJD532012	8	21
XNH261604	8	5
XNH261605	8	4
XNH361206	8	24
XNH361400	8	2
XNH361401	8	3
XNH362112	8	8
XNH362709	8	16
XNH362802	8	18
XNH362803	8	19
XNH362809	8	15
XNH362810	8	17
XNH363001	8	9
XNH363051	8	10
XNH364405	8	11
XNH364606	8	7
XNH365303	8	14
XNH365418	8	13
XNH733104	8	12
XNH964771	8	20
XNH978931	8	22
XNN171110	8	6
XNN976562	8	23

PARTS No.	Fig.	Ref.No.

YANMAR

YANMAR CO.,LTD.