YANMAR

PARTS CATALOG

Published 2009/2 (Feb.)

0CR10-G74800

P R E F A C E

1.This parts catalog is a first edition of the 6BY2-220, 6BY2-220Z, 6BY2-260, 6BY2-260Z Diesel engine.

	Parts catalog No.	Date of issue	Remarks
First edition	0CR10-G74800	Jan.,2009	No need

2.This parts catalog dose not contain the technical data needed for maintenance service.

3.The illustrations used in this parts catalog have been simplified for clarity.

4.The contents of this parts catalog are subject to change without notice.

5.Be sure to use only Yanmar genuine parts for repairs. If imitation parts are used, it may cause engine defects.

Directions for the Parts Catalog.

1.The parts stipulated in this Parts Catalog are not necessarily standard equipped parts.
2.Parts may change without prior notice.
3.The following is an example of the Parts Catalog format.

0CF10-E21601 29. FUEL INJECTION PUMP (W/BOOST)

(A)=4JH—DT (D)=4JH—DTZA
(B)=4JH—DTZ (E)=4JH—DTZY
(C)=4JH—DTZP (F)=

REF.	LEV.	PARTSNo.	DESCRIPTION	QTY (A)	(B)	(C)	(D)	(E)	(F)	I	R
1		729595-51390	FUEL INJECTION PUMP	1	1	1	1	1			1
1—1	1	729595-51391	FUEL INJECTION PUMP	1	1	1	1	1			N 1
	(A=E00185)	(B=E00200)									
3	2	26022-060162	SCREW M 6X16	9	9	9	9	9			
I 3—1	2	26022-060162	SCREW M 6X16	4	4	4	4	4			K
	(A=E00156)	(B=E00156)	(C=E00156) (D=E00156)	(E=E00156)							
4	2	129470-51040	CAMSHFT	9	9	9	9	9			
5	2	122710-51050	BEARING.ROLLER	9	9	9	9	9			
6	2	129470-51060	RETAINER	9	9	9	9	9			

Remarks
(1) BOOST COMPEMSATOR TYPE.
OPTIONAL PART. TO E/#00155
(4JH-DT, 4JH-DTZ)

①Ref. No.

The Ref. No. listed may not be in accordance with the illustration Ref. No.

(Ex.) Illustration No. 1 — List Ref No. 1 (Before change) → 1-1 (After change)

For interchangeable symbols N, R and K, illustrations for new parts may be abbreviated.

②Lev. (Level)

Level indication
The numbers below indicate the level of relativity towards the main part.
1 ----- Main parts (Assembly parts)
2 ----- Sub component included in " 1 ".
3 ----- Sub component included in " 2 ".
Note) Parts that are not for sale are partially illustrated but not listed.

③Change Mark

The "I" indicates parts that were newly changed.

④Interchangeability Mark

When a part change takes place, one of the following interchangeability symbols is indicated beside the part.

Symbol	Interchangeability	Contents note
N	Old ←Yes / No→ New	New Part is interchangeable for Old Part but Old Part is not interchangeable for New Part.
Q	Old ←No / Yes→ New	New Part is not interchangeable for Old Part but Old Part is interchangeable for New Part.
R	Old ←Yes / Yes→ New	New/ Old Parts are both interchangeable.
S	Old ←No / No→ New	New/ Old Parts are both not interchangeable.
W		Part discontinued.
Z		Part newly added.
F		Not interchangeable by a single part but interchangeable together with related parts.
K		Changes only for used parts quantities.

⑤Effective Machine No.

When a part changes, the effective Machine No. will be indicated in the (A)-(F) column.

Product Symbol	Product No.	Product Symbol	Product No.
C	Clutch No. Compressor No.	F	Machine No. (Agricultural Equip.)
D	Drive No.	M	Machine No.
E	Engine No.	Note 1)	Date

Note 1) A date may follow the symbol. (Ex.) 1996.01
Note 2) " XXX " are for parts that could not be predicted or for engine models that could not be identified.
Note 3) (A=E/#00185) is the E/# (Engine Serial Number) for the column (A) model (in this case 4JH-DT) after the parts design change.

⑥Remarks Mark

Figures or alphabets (symbols) are entered in the remarks column.
The comments (remarks) on parts that are indicated at the bottom of the illustration are the same symbols as those stated above.

CONTENTS

MODEL : 6BY2
PC NO : 0CR10-G74800

Fig.No. GROUP NAME

6BY2

1. CYLINDER BLOCK
2. LOWER TIMING CASE/BELT W PUMP
3. FLYWHEEL HOUSING
4. OIL PAN/LUB. OIL SUMP
5. ENGINE BRACKET
6. LABEL
7. CYL.HEAD/VALVE TRAIN-CAMSHAFT
8. CYL.HEAD ATTACHED/GLOW PLUG
9. CYLINDER HEAD COVER
10. INTAKE MANIFOLD
11. TURBOCHARGER
12. CRANKSHAFT WITH BEARING SHELLS
13. FLYWHEEL & CYL.MOUNTING PARTS
14. PISTON & CONNECTING ROD
15. TIMING CHAIN LOWER P/DAMPER
16. TIMING GEAR TIMING CHAIN TOP
17. V-BELT
18. LUB.OIL PUMP
19. LUB.OIL FILTER
20. ROTARY PUMP(OPTION)
21. LUB.OIL PIPE(TURBOCHARGER)
22. AIR COOLER
23. AIR COOLER(INNER PARTS)
24. WATER PUMP
25. COOLING SEA WATER PUMP
26. HEAT EXCHANGER
27. HEAT EXCHANGER(INNER PARTS)
28. HOSE, FW PUMP
29. MIXING ELBOW

Fig.No. GROUP NAME

30. BILGE PUMP(OPTION)
31. STEERING OIL COOLER
32. STEERING PUMP/PIPE
33. FUEL OIL FILTER/PIPE
34. PUMP, FUEL LOW
35. HIGH-PRESSURE PUMP/INJECTOR
36. FUEL FILTER
37. STARTING MOTOR
38. ALTERNATOR
39. WIRE HARNESS(ECU)
40. WIRE HARNESS
41. AIR HEATER(OPTION)
42. ECU
43. TOP COVER & V-BELT COVER
44. M.ELBOW HIGH RISER (OPTION)
45. FUEL FILTER (OPTION)
46. VDO GAUGE (OPTION)
47. C.S.W.PIPE&COUPLING (ZT SPEC)
48. C.S.W.PIPE&EXHAUST BEND(OPTION

Fig.1. CYLINDER BLOCK

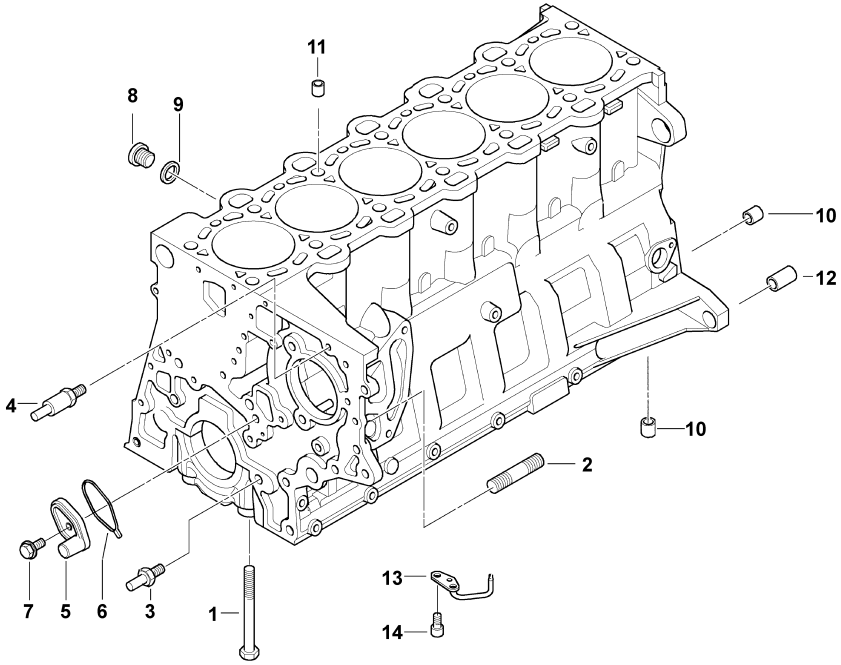

1. CYLINDER BLOCK

(A)=6BY2-220
(B)=6BY2-260
(C)=6BY2-220Z
(D)=6BY2-260Z
(E)=
(F)=

REF.	LEV.	PARTS NO.	DESCRIPTION	Q'TY (A)	(B)	(C)	(D)	(E)	(F)	I	R
1	1	165000-67770	BOLT, HEX M10X80	14	14	14	14				
2	1	165000-67790	STUD, M8X42	3	3	3	3				
3	1	165000-67730	BOLT, BEARING	3	3	3	3				
4	1	165000-67760	BOLT, BEARING	1	1	1	1				
5	1	165000-67780	NOZZLE, OIL SPRAYING	1	1	1	1				
6	1	165000-67750	GASKET, PROFILE	1	1	1	1				
7	1	165000-67400	SCREW, HEAD M6X16	1	1	1	1				
8	1	165000-67290	PLUG, SCREW M14X1.5	1	1	1	1				
9	1	165000-67470	RING, GASKET 14X20	1	1	1	1				
10	1	165000-67880	DOWEL, D=10.5MM	6	6	6	6				
11	1	165000-67720	DOWEL, D=14.5MM	2	2	2	2				
12	1	165000-67740	DOWEL, D=14.5MM	2	2	2	2				
13	1	165000-69480	NOZZLE, OIL SPRAYING	6	6	6	6				
14	1	165000-67410	SCREW, HEAD M6X10	12	12	12	12				

N:Old $\xleftrightarrow[\text{No}]{\text{Yes}}$ New, Q:Old $\xleftrightarrow[\text{Yes}]{\text{No}}$ New, R:Old $\xleftrightarrow[\text{Yes}]{\text{Yes}}$ New, S:Old $\xleftrightarrow[\text{No}]{\text{No}}$ New, W:Add, Z:Discontinued, F:Interchangeable by set, K:Q'ty Change

(C)Copy Rights YANMAR CO.,LTD.

Fig.2. LOWER TIMING CASE/BELT W PUMP

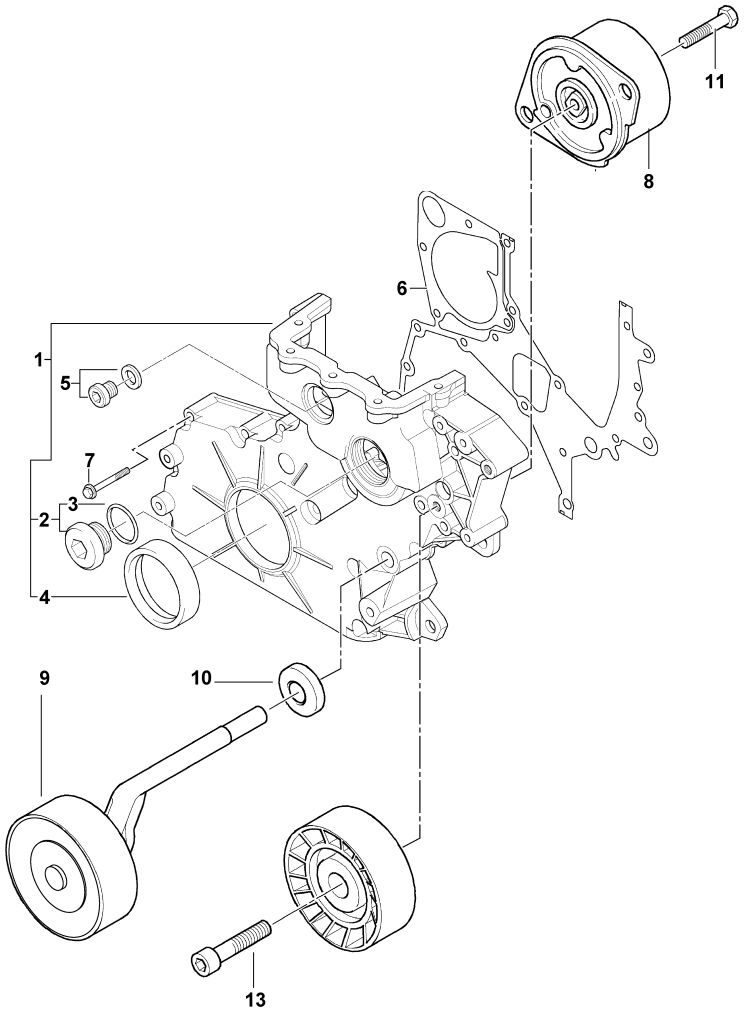

2. LOWER TIMING CASE/BELT W PUMP

(A)=6BY2-220
(B)=6BY2-260
(C)=6BY2-220Z
(D)=6BY2-260Z
(E)=
(F)=

REF.	LEV.	PARTS NO.	DESCRIPTION	Q'TY (A)	(B)	(C)	(D)	(E)	(F)	I	R
1	1	165000-68430	COVER, TIMING CASE	1	1	1	1				
2	2	165000-68390	PLUG, SCREW M40X1.5	1	1	1	1				
3	2	165000-68400	O-RING, 35 2.0	1	1	1	1				
4	2	165000-68420	SEAL, SHAFT 55 68 8	1	1	1	1				
5	1	165000-68410	PLUG, SCREW M30X1	1	1	1	1				
6	1	165000-68450	GASKET, STEEL	1	1	1	1				
7	1	165000-69690	SCREW, TORX M7X38	14	14	14	14				
8	1	165000-69130	TENSIONER, BELT	1	1	1	1				
9	1	165001-35850	TENSIONER, BELT	1	1	1	1				
10	1	165000-69120	SEALING	1	1	1	1				
11	1	165000-67230	BOLT, HEX M6 30	1	1	1	1				
13	1	165000-67330	SCREW, HEAD M8X35	1	1	1	1				

N:Old ◄Yes/No► New, Q:Old ◄No/Yes► New, R:Old ◄Yes/Yes► New, S:Old ◄No/No► New, W:Add, Z:Discontinued, F:Interchangeable by set, K:Q'ty Change

(C)Copy Rights YANMAR CO.,LTD.

Fig.3. FLYWHEEL HOUSING

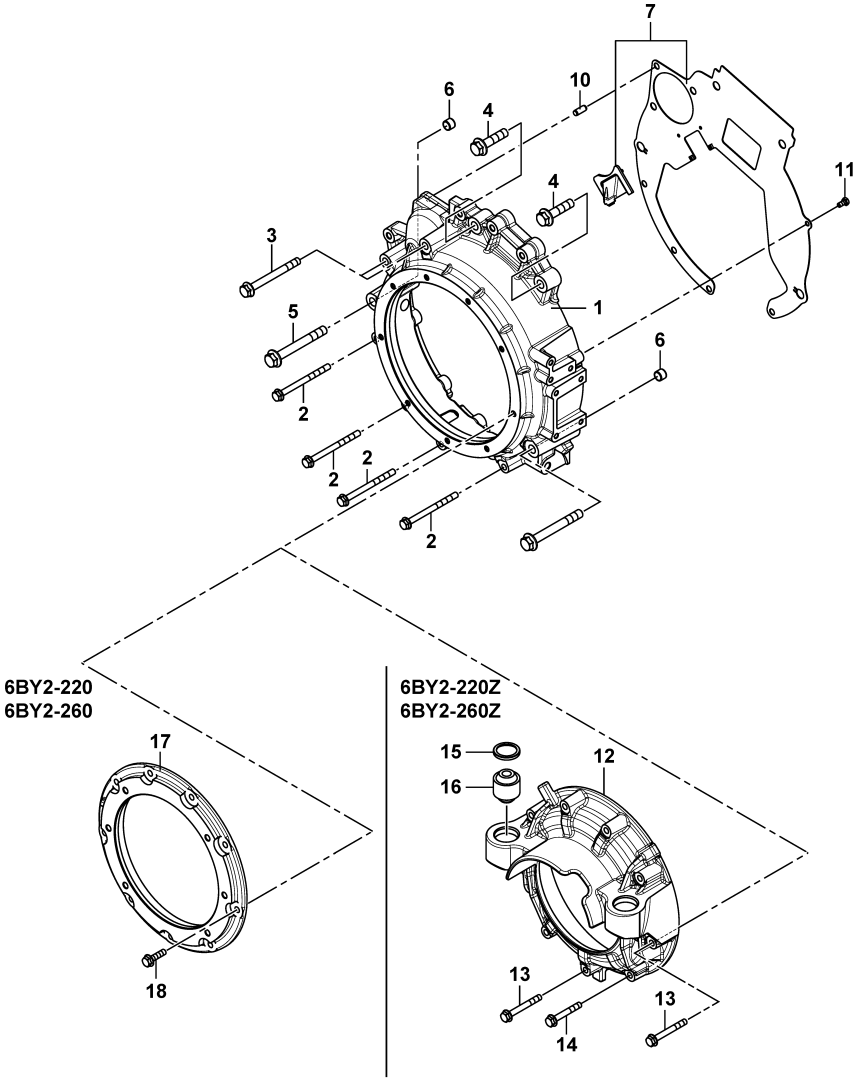

3. FLYWHEEL HOUSING

(A)=6BY2-220
(B)=6BY2-260
(C)=6BY2-220Z
(D)=6BY2-260Z
(E)=
(F)=

REF.	LEV.	PARTS NO.	DESCRIPTION	Q'TY (A)	(B)	(C)	(D)	(E)	(F)	I	R
1	1	120660-01800	HOUSING, FLYWHEEL	1	1	1	1				
2	1	120640-01940	FLANGE BOLT, 8X100	4	4	4	4				
3	1	120640-02010	FLANGE BOLT, 10X100	2	2	2	2				
4	1	120640-02050	FLANGE BOLT, 12X50	2	2	2	2				
5	1	120640-02040	BOLT, 12X100	2	2	2	2				
6	1	120640-00100	DOWEL PIN, 14.5	2	2	2	2				
7	1	120660-01900	PLATE ASSY, FWH	1	1	1	1				
10	1	120640-00220	PIN, PARALLEL	1	1	1	1				
11	1	120640-01460	BOLT, 6X12	1	1	1	1				
12	1	120661-01710	COVER, FWH DRIVE			1	1				
13	1	120640-01910	FLANGE BOLT, 8X65			8	8				
14	1	120640-01900	FLANGE BOLT, 8X55			1	1				
15	1	119778-08350	SPACER, RUBBER			2	2				
16	1	120650-01760	MOUNT,RUBBER			2	2				
17	1	120653-01710	COVER, FWH	1	1						
18	1	120640-02130	FLANGE BOLT, 8X30	9	9						

N:Old ◄Yes/No► New, Q:Old ◄No/Yes► New, R:Old ◄Yes/Yes► New, S:Old ◄No/No► New, W:Add, Z:Discontinued, F:Interchangeable by set, K:Q'ty Change

(C)Copy Rights YANMAR CO.,LTD.

Fig.4. OIL PAN/LUB. OIL SUMP

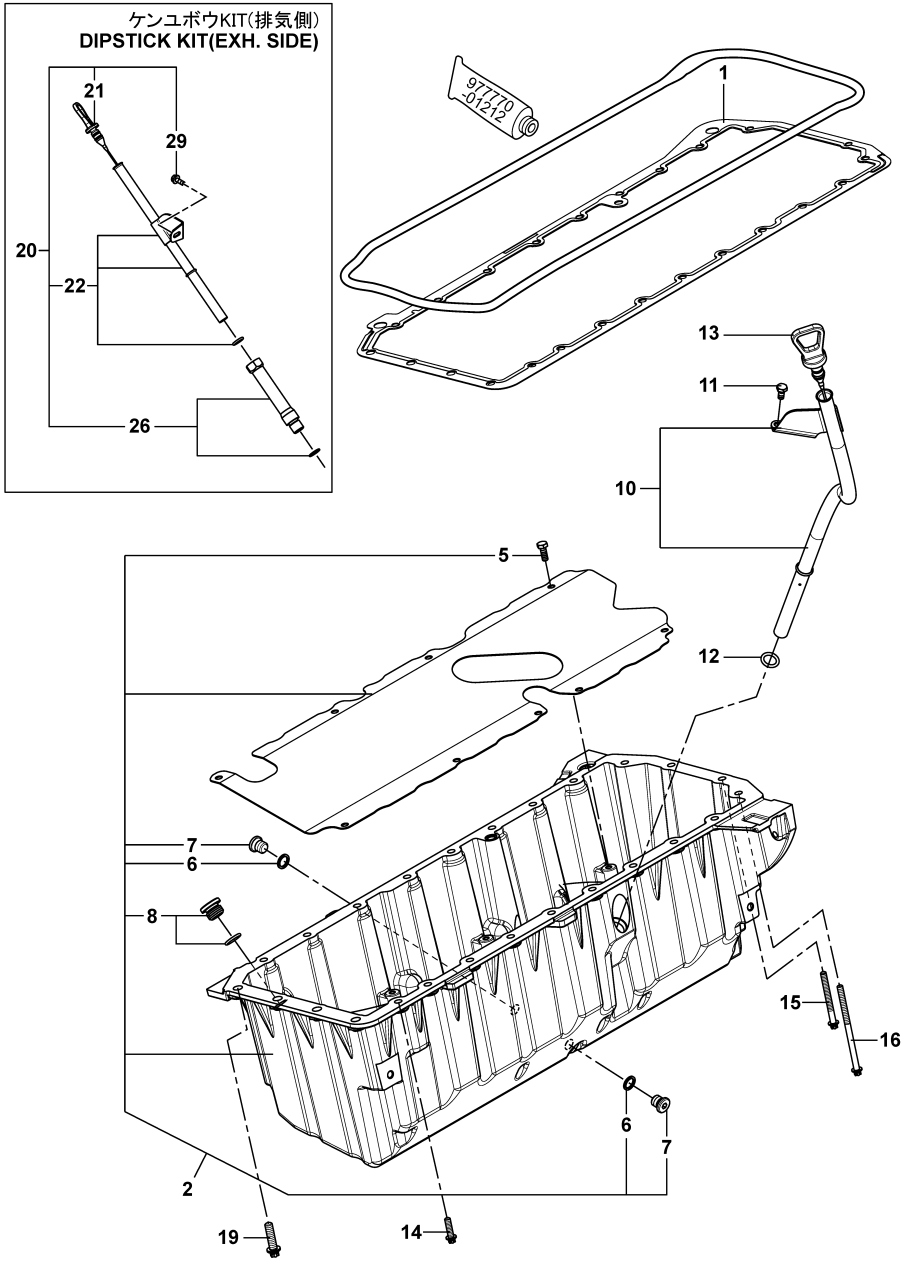

4. OIL PAN/LUB. OIL SUMP

(A)=6BY2-220
(B)=6BY2-260
(C)=6BY2-220Z
(D)=6BY2-260Z
(E)=
(F)=

REF.	LEV.	PARTS NO.	DESCRIPTION	Q'TY (A)	(B)	(C)	(D)	(E)	(F)	I	R
1	1	165000-68310	GASKET, OIL SUMP	1	1	1	1				
2	1	165000-93260	SUMP,LUB.OIL	1	1	1	1				
5	2	120650-51620	TAPPING BOLT, 6X16	9	9	9	9				
6	2	120640-01230	GASKET, 12X1.5	2	2	2	2				
7	2	120640-00190	PLUG, M12	2	2	2	2				
8	2	165000-93270	PLUG, M18	1	1	1	1				
10	1	120660-34840	GUIDE ASSY, DIPSTICK	1	1	1	1				
11	1	120640-02080	FLANGE BOLT, 6X16	1	1	1	1				
12	1	120650-34890	O-RING, 14X3	1	1	1	1				
13	1	120660-34800	DIPSTICK, OIL	1	1	1	1				
14	1	165001-35980	BOLT, TORX M6X22	18	18	18	18				
15	1	165001-35810	BOLT, TORX M6X60	2	2	2	2				
16	1	165001-35820	BOLT, TORX M6X100	2	2	2	2				
17	1	165001-25170	BOLT, TORX	3	3	3	3				
18	1	165000-93230	PLUG,SCREW M10X1	1	1	1	1				
19	1	165000-93240	RING,GASKET	1	1	1	1				
20	1	120660-34700	DIPSTICK KIT, STBD	1	1	1	1				
21	2	120660-34810	DIPSTICK	1	1	1	1				
22	2	120650-34850	GUIDE ASY, DIPSTICK	1	1	1	1				
26	2	120650-34910	ADAPTOR ASY, GUIDE D	1	1	1	1				
29	2	26106-060122	BOLT, 6 X 12	1	1	1	1				

N:Old $\frac{\text{Yes}}{\text{No}}$ New, Q:Old $\frac{\text{No}}{\text{Yes}}$ New, R:Old $\frac{\text{Yes}}{\text{Yes}}$ New, S:Old $\frac{\text{No}}{\text{No}}$ New, W:Add, Z:Discontinued, F:Interchangeable by set, K:Q'ty Change

(C)Copy Rights YANMAR CO.,LTD.

Fig.5. ENGINE BRACKET

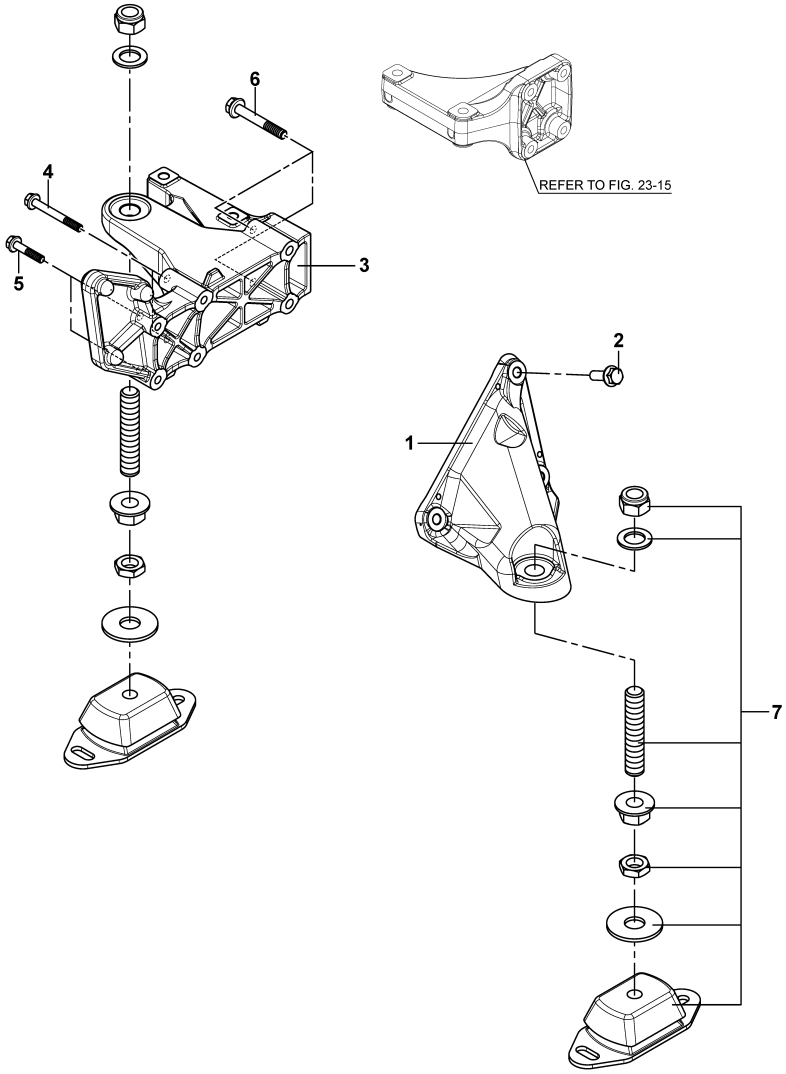

5. ENGINE BRACKET

(A)=6BY2-220
(B)=6BY2-260
(C)=6BY2-220Z
(D)=6BY2-260Z
(E)=
(F)=

REF.	LEV.	PARTS NO.	DESCRIPTION	Q'TY (A)	(B)	(C)	(D)	(E)	(F)	I	R
1	1	120660-08100	FOOT, MOUNTING FL	1	1	1	1				
2	1	120640-01970	BOLT, M10X35-10.9	3	3	3	3				
3	1	120660-08110	FOOT, MOUNTING FR	1	1	1	1				
4	1	120640-01920	BOLT, M8X70-10.9	2	2	2	2				
5	1	120640-01880	BOLT, M8X50-10.9	2	2	2	2				
6	1	120640-02000	BOLT, M10X75-10.9	2	2	2	2				
7	1	120650-08401	MOUNT, ENGINE	2	2	2	2				

N:Old $\xleftrightarrow[\text{No}]{\text{Yes}}$ New, Q:Old $\xleftrightarrow[\text{Yes}]{\text{No}}$ New, R:Old $\xleftrightarrow[\text{Yes}]{\text{Yes}}$ New, S:Old $\xleftrightarrow[\text{No}]{\text{No}}$ New, W:Add, Z:Discontinued, F:Interchangeable by set, K:Q'ty Change

(C)Copy Rights YANMAR CO.,LTD.

Fig.6. LABEL

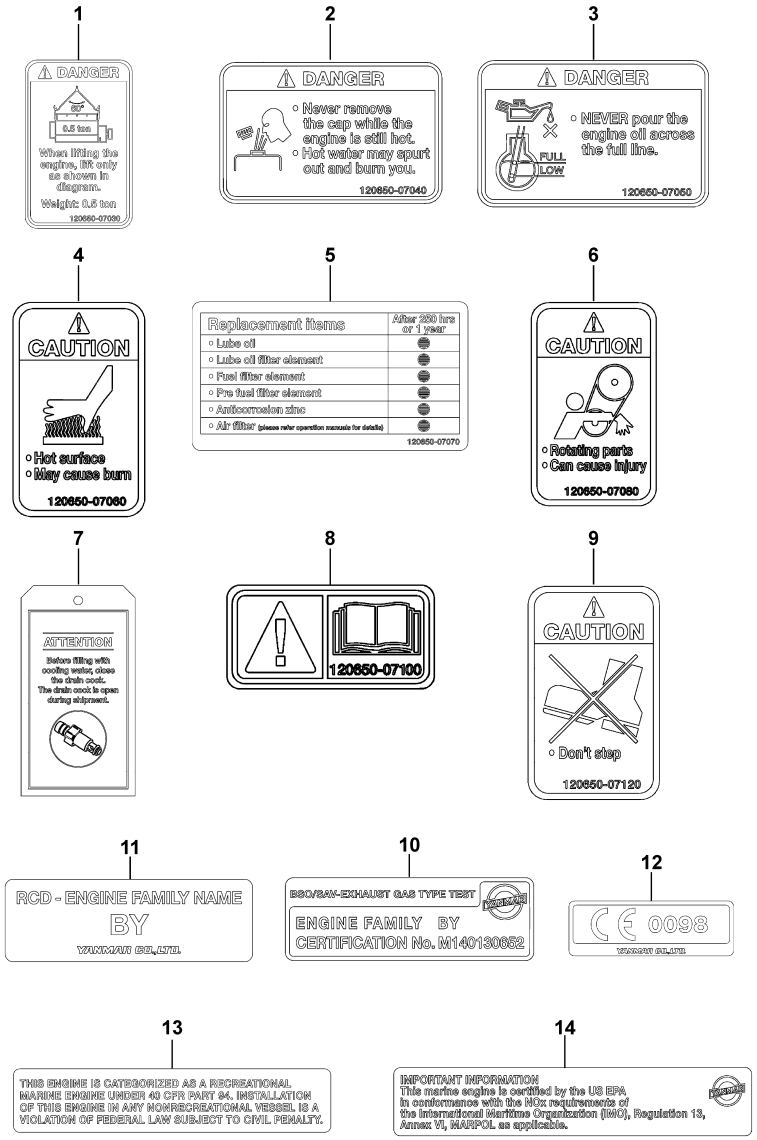

6. LABEL

(A)=6BY2-220
(B)=6BY2-260
(C)=6BY2-220Z
(D)=6BY2-260Z
(E)=
(F)=

REF.	LEV.	PARTS NO.	DESCRIPTION	Q'TY (A)	(B)	(C)	(D)	(E)	(F)	I	R
1	1	120650-07030	LABEL, LIFTER	2	2	2	2				
2	1	120650-07040	LABEL, PRESSURE CAP	1	1	1	1				
3	1	120650-07050	LABEL, OIL DANGER	1	1	1	1				
4	1	120650-07060	LABEL, CAUTION HOT	1	1	1	1				
5	1	120650-07070	LABEL, INTERVAL	1	1	1	1				
6	1	120650-07080	LABEL, CAUTION ROTAT	1	1	1	1				
7	1	120650-07090	LABEL, CAUTION DRAIN	1	1	1	1				
8	1	120650-07100	LABEL, CAUTION MANUA	1	1	1	1				
9	1	120651-07120	LABEL, CAUTION NO ST	1	1	1	1				
10	1	120650-07150	LABEL, BSO			1	1				
11	1	120650-07161	LABEL,RCD			1	1				
12	1	120650-07171	LABEL,RCD-CE			1	1				
13	1	120650-07191	LABEL,RECREATIONAL			1	1				
14	1	120650-07111	LABEL, IMO			1	1				

N:Old $\xleftarrow[\text{No}]{\text{Yes}}$ New, Q:Old $\xleftarrow[\text{Yes}]{\text{No}}$ New, R:Old $\xleftarrow[\text{Yes}]{\text{Yes}}$ New, S:Old $\xleftarrow[\text{No}]{\text{No}}$ New, W:Add, Z:Discontinued, F:Interchangeable by set, K:Q'ty Change

(C)Copy Rights YANMAR CO.,LTD.

Fig.7. CYL.HEAD/VALVE TRAIN-CAMSHAFT

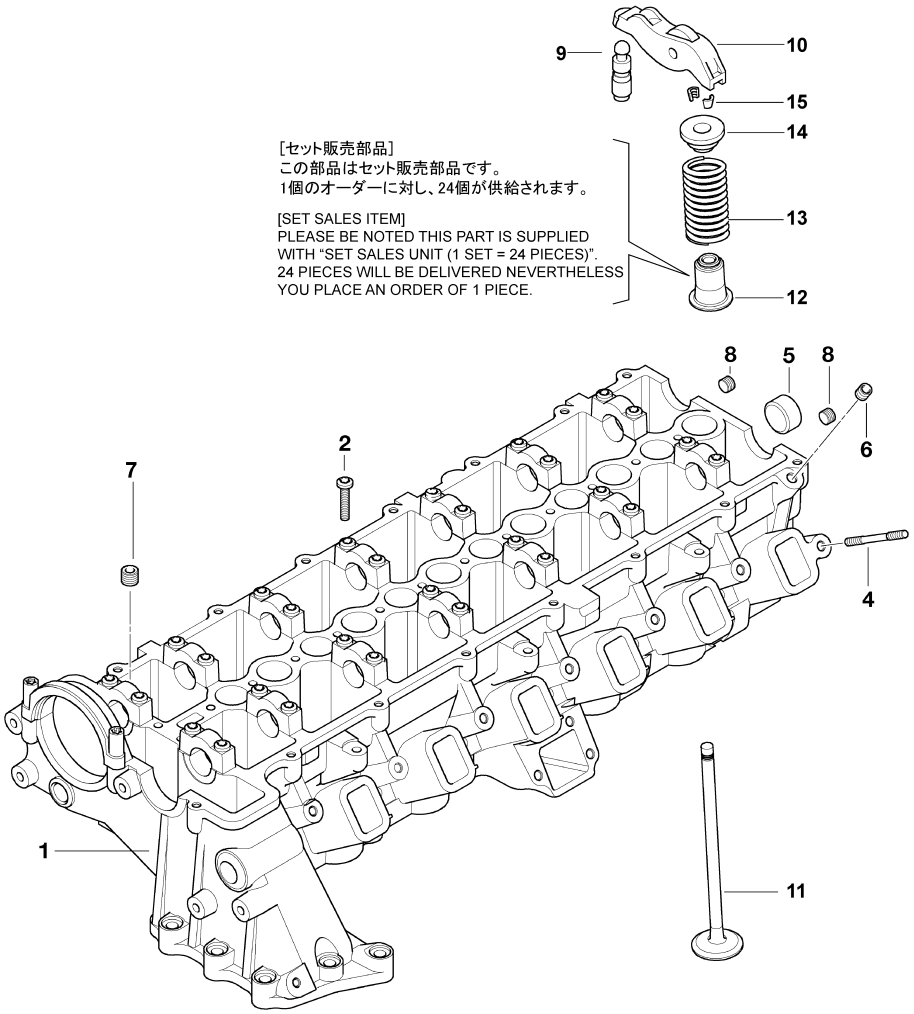

7. CYL.HEAD/VALVE TRAIN-CAMSHAFT

(A)=6BY2-220
(B)=6BY2-260
(C)=6BY2-220Z
(D)=6BY2-260Z
(E)=
(F)=

REF.	LEV.	PARTS NO.	DESCRIPTION	Q'TY (A)	(B)	(C)	(D)	(E)	(F)	I	R
1	1	165001-35920	HEAD, CYLINDER	1	1	1	1				
2	1	165000-67920	BOLT, TORX M6X30	28	28	28	28				
4	1	165001-39240	STUD, M7X65	7	7	7	7				
5	1	165000-67420	COVER, D=24MM	2	2	2	2				
6	1	165000-67870	PLUG, SCREW M8X1	2	2	2	2				
7	1	165000-67910	PLUG, SCREW M12X1.5	1	1	1	1				
8	1	165001-35970	PLUG, SCREW M14X1.5	2	2	2	2				
9	1	165000-69290	ROD, VALVE PUSH	24	24	24	24				
10	1	165000-69280	LEVER, DRAG	24	24	24	24				
11	1	165000-69320	VALVE, 25.9/5.92MM	24	24	24	24				
12	1	165000-69350	SEAL RING SET, VALVE	1	1	1	1				
13	1	165000-69330	SPRING, VALVE	24	24	24	24				
14	1	165000-69310	PLATE, SPRING UPPER	24	24	24	24				
15	1	165000-69300	COLLET, VALVE D=6	48	48	48	48				

N:Old $\xleftrightarrow[\text{No}]{\text{Yes}}$ New, Q:Old $\xleftrightarrow[\text{Yes}]{\text{No}}$ New, R:Old $\xleftrightarrow[\text{Yes}]{\text{Yes}}$ New, S:Old $\xleftrightarrow[\text{No}]{\text{No}}$ New, W:Add, Z:Discontinued, F:Interchangeable by set, K:Q'ty Change

(C)Copy Rights YANMAR CO.,LTD.

Fig.8. CYL.HEAD ATTACHED/GLOW PLUG

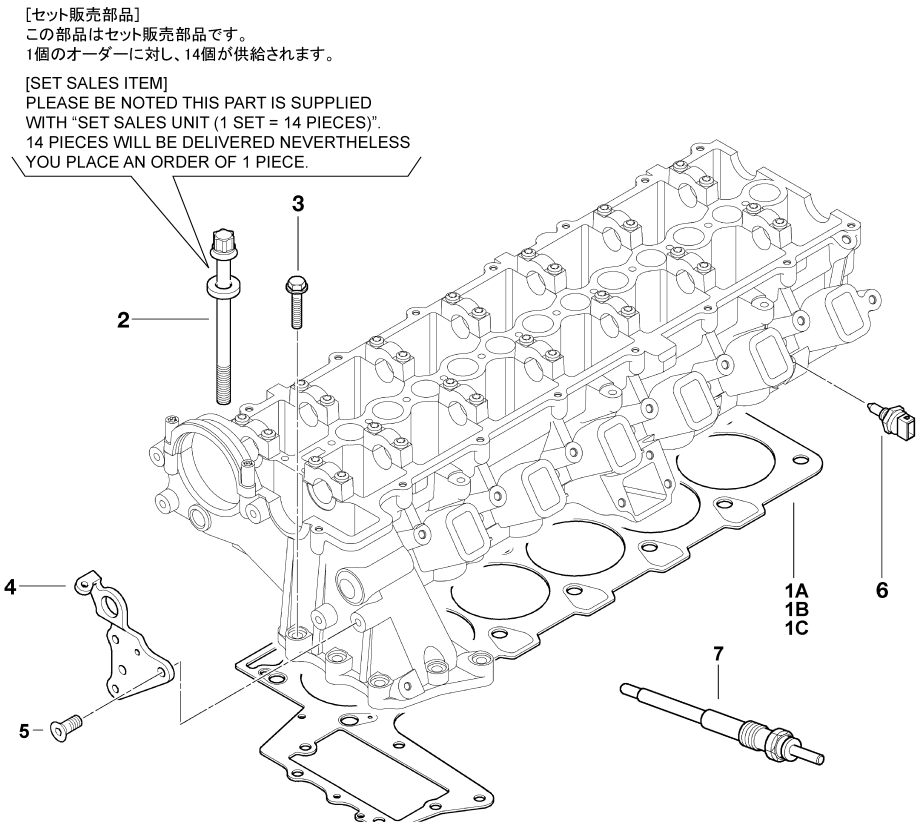

8. CYL.HEAD ATTACHED/GLOW PLUG

(A)=6BY2-220
(B)=6BY2-260
(C)=6BY2-220Z
(D)=6BY2-260Z
(E)=
(F)=

REF.	LEV.	PARTS NO.	DESCRIPTION	Q'TY (A)	(B)	(C)	(D)	(E)	(F)	I	R
1A	1	165000-68050	GASKET, HEAD 1-HOLE	1	1	1	1				
1B	1	165000-68060	GASKET, HEAD 2-HOLE	1	1	1	1				
1C	1	165000-68070	GASKET, HEAD 3-HOLE	1	1	1	1				
2	1	165000-68280	BOLT SET, CYL.HEAD	1	1	1	1				
3	1	165001-35680	SCREW, M8X35	7	7	7	7				
4	1	165000-67990	LOOP	1	1	1	1				
5	1	165000-68000	SCREW, COUNTERSUNK	2	2	2	2				
6	1	165000-70660	SENSOR, TEMPERATURE	1	1	1	1				
7	1	165000-70000	PLUG, GLOW	6	6	6	6				

N:Old $\frac{\text{Yes}}{\text{No}}$ New, Q:Old $\frac{\text{No}}{\text{Yes}}$ New, R:Old $\frac{\text{Yes}}{\text{Yes}}$ New, S:Old $\frac{\text{No}}{\text{No}}$ New, W:Add, Z:Discontinued, F:Interchangeable by set, K:Q'ty Change

(C)Copy Rights YANMAR CO.,LTD.

Fig.9. CYLINDER HEAD COVER

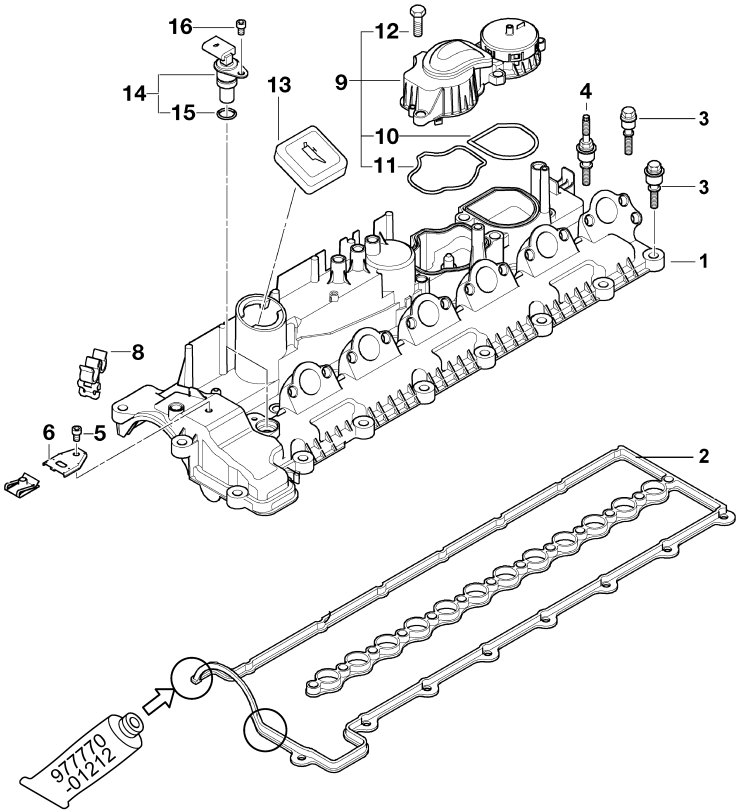

0CR10-G74800 9. CYLINDER HEAD COVER

(A)=6BY2-220
(B)=6BY2-260
(C)=6BY2-220Z
(D)=6BY2-260Z
(E)=
(F)=

REF.	LEV.	PARTS NO.	DESCRIPTION	Q'TY (A)	(B)	(C)	(D)	(E)	(F)	I	R
1	1	165000-68150	COVER, CYLINDER HEAD	1	1	1	1				
2	1	165000-68240	GASKET, PROFILE	1	1	1	1				
3	1	165001-35780	ELEMENT, OUTER	1	1	1	1				
4	1	165001-39220	ELEMENT, INNER	1	1	1	1				
5	1	165000-67360	SCREW, M6X12	1	1	1	1				
6	1	165000-68010	BRACKET, METAL	1	1	1	1				
8	1	165000-68230	CLAMP, HOSE D=6/8MM	1	1	1	1				
9	1	165000-68180	BREATHER	1	1	1	1				
10	2	165000-68160	GASKET, PROFILE	1	1	1	1				
11	2	165000-68170	GASKET, PROFILE	1	1	1	1				
12	2	165000-69910	BOLT, HEX	4	4	4	4				
13	1	165000-71020	COVER	1	1	1	1				
14	1	165000-70700	GENERATOR, PULSE	1	1	1	1				
15	2	165000-70730	O-RING, 17X2.8	1	1	1	1				
16	1	165000-68120	BOLT,PLASTIC M5X19.5	1	1	1	1				

N:Old $\frac{\text{Yes}}{\text{No}}$ New, Q:Old $\frac{\text{No}}{\text{Yes}}$ New, R:Old $\frac{\text{Yes}}{\text{Yes}}$ New, S:Old $\frac{\text{No}}{\text{No}}$ New, W:Add, Z:Discontinued, F:Interchangeable by set, K:Q'ty Change

(C)Copy Rights YANMAR CO.,LTD.

Fig.10. INTAKE MANIFOLD

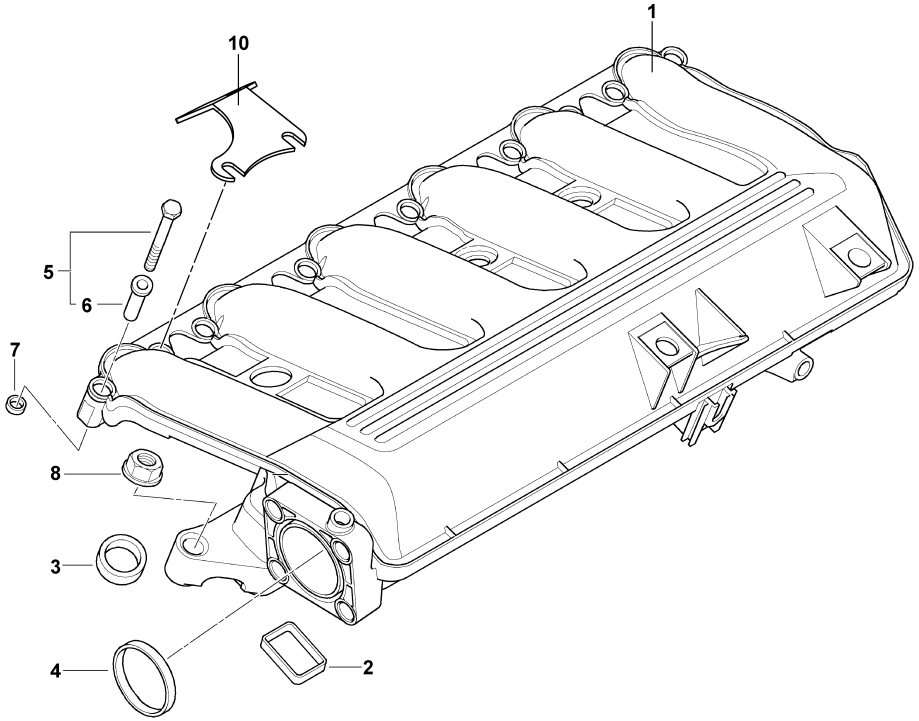

10. INTAKE MANIFOLD

(A)=6BY2-220
(B)=6BY2-260
(C)=6BY2-220Z
(D)=6BY2-260Z
(E)=
(F)=

REF.	LEV.	PARTS NO.	DESCRIPTION	Q'TY (A)	(B)	(C)	(D)	(E)	(F)	I	R
1	1	165000-69870	MANIFOLD,INTAKE	1	1	1	1				
2	1	165000-69860	GASKET, PROFILE	6	6	6	6				
3	1	165000-69810	GASKET, PROFILE	6	6	6	6				
4	1	165000-69800	SEALING, RUBBER	1	1	1	1				
5	1	165000-69830	FASTEN, ELEMENT 6X42	12	12	12	12				
6	1	165000-69820	MOUNTING, RUBBER	7	7	7	7				
7	1	165000-69840	RING, BACKUP	7	7	7	7				
8	1	165001-35790	NUT, FLANGE M7	7	7	7	7				
9	1	165000-69850	BOX, VACUMM	1	1	1	1				
10	1	120660-17290	SUPPORT, TOP COVER	2	2	2	2				

N:Old $\frac{\text{Yes}}{\text{No}}$ New, Q:Old $\frac{\text{No}}{\text{Yes}}$ New, R:Old $\frac{\text{Yes}}{\text{Yes}}$ New, S:Old $\frac{\text{No}}{\text{No}}$ New, W:Add, Z:Discontinued, F:Interchangeable by set, K:Q'ty Change

(C)Copy Rights YANMAR CO.,LTD.

Fig.11. TURBOCHARGER

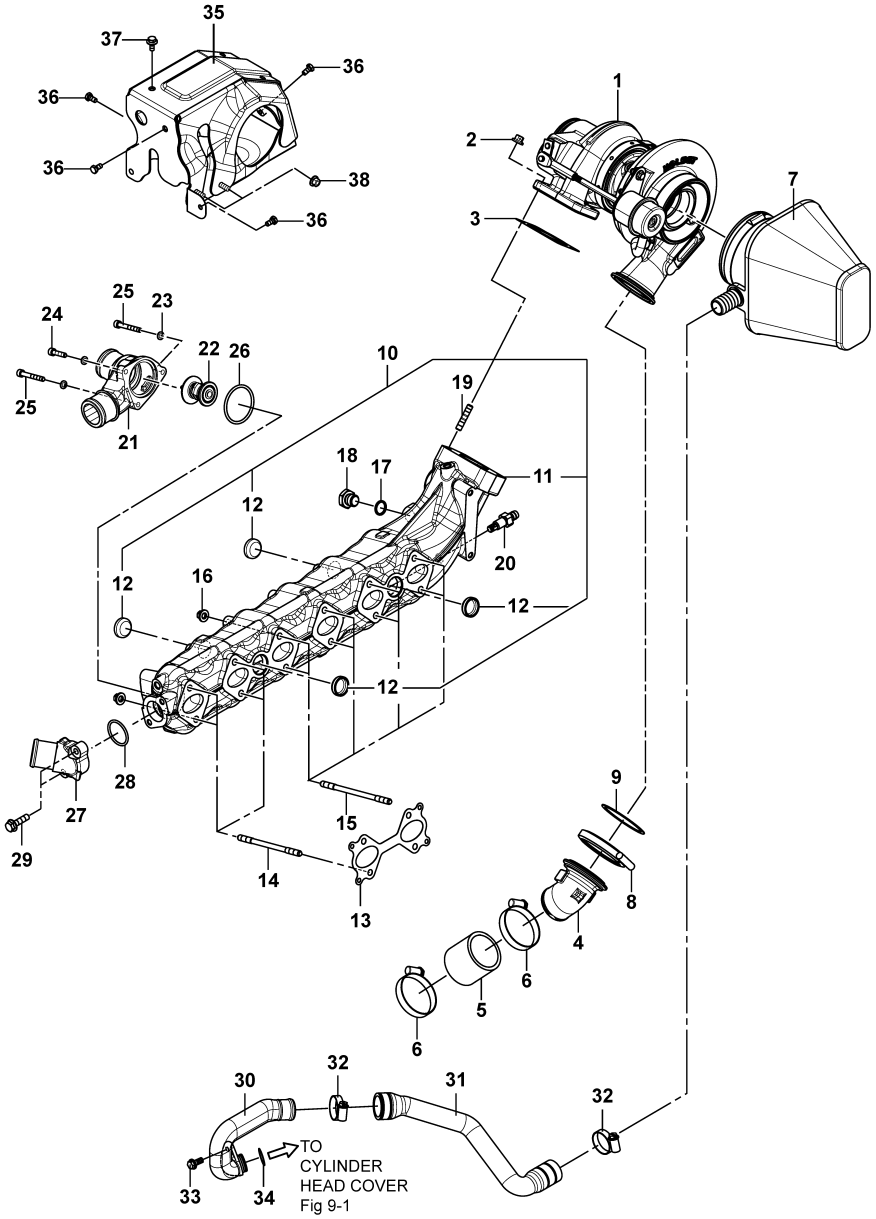

11. TURBOCHARGER

(A)=6BY2-220
(B)=6BY2-260
(C)=6BY2-220Z
(D)=6BY2-260Z
(E)=
(F)=

REF.	LEV.	PARTS NO.	DESCRIPTION	Q'TY (A)	(B)	(C)	(D)	(E)	(F)	I	R
1	1	120661-18010	TURBINE, HOLSET	1	1	1	1				
2	1	120650-13070	FLANGE NUT, 8	4	4	4	4				
3	1	120660-18200	GASKET, TURBINE IN	1	1	1	1				
4	1	120660-18050	ELBOW, AIR CHARGE	1	1	1	1				
5	1	120660-18900	HOSE, COMPRESSOR OUT	1	1	1	1				
6	1	120650-49720	CLAMP, HOSE 40-60 C	2	2	2	2				
7	1	120660-12510	FILTER, AIR	1	1	1	1				
8	1	120660-18140	V-CLAMP	1	1	1	1				
9	1	120660-18210	GASKET,AIR CHARGE	1	1	1	1				
10	1	120660-13160	MANIFOLD ASSY, EXH.	1	1	1	1				
11	2	120660-13040	MANIFOLD, EXHAUST	1	1	1	1				
12	2	120650-13150	PLUG, 28	4	4	4	4				
13	1	120640-00040	GASKET, EXH.MANIFOLD	3	3	3	3				
14	1	120650-13130	STUD,BOLT 8 X 129	4	4	4	4				
15	1	120650-13140	STUD,BOLT 8 X 144	8	8	8	8				
16	1	120650-13070	FLANGE NUT, 8	12	12	12	12				
17	1	120640-01260	GASKET, 17X1.5	1	1	1	1				
18	1	120650-13330	PLUG, G 3/8 HEAT R	1	1	1	1				
19	1	120650-13090	STUD,BOLT 8 TURBO	4	4	4	4				
20	1	120650-49610	COCK, DRAIN	1	1	1	1				
21	1	120650-44560	COVER,THERMOSTAT	1	1	1	1				
22	1	120650-44570	THERMOSTAT	1	1	1	1				
23	1	120640-02220	WASHER, 6	3	3	3	3				
24	1	120640-01590	CAP BOLT, 6X25	1	1	1	1				
25	1	120640-01500	CAP BOLT, 6X45	2	2	2	2				
26	1	120650-44580	O-RING, THERMOSTAT	1	1	1	1				
27	1	120650-44540	ELBOW, EXHAUST MANIF	1	1	1	1				
28	1	120650-44590	O-RING, ELBOW EXHAUS	1	1	1	1				
29	1	120640-02130	FLANGE BOLT, 8X30	2	2	2	2				
30	1	120660-11410	PIPE,BLOWBY	1	1	1	1				
31	1	120660-11430	HOSE, BLOWBY	1	1	1	1				
32	1	120640-01030	CLAMP, HOSE 25-40	2	2	2	2				
33	1	120640-01460	BOLT, 6X12	1	1	1	1				
34	1	120660-11460	O-RING,21.95X1.78	1	1	1	1				
35	1	120661-18300	PROTECTOR, HEAT TURB	1	1	1	1				
36	1	120640-01460	BOLT, 6X12	4	4	4	4				
37	1	120640-02080	FLANGE BOLT, 6X16	1	1	1	1				
38	1	120640-00320	FLANGE NUT, 6	2	2	2	2				

N:Old $\frac{\text{Yes}}{\text{No}}$ New, Q:Old $\frac{\text{No}}{\text{Yes}}$ New, R:Old $\frac{\text{Yes}}{\text{Yes}}$ New, S:Old $\frac{\text{No}}{\text{No}}$ New, W:Add, Z:Discontinued, F:Interchangeable by set, K:Q'ty Change

(C)Copy Rights YANMAR CO.,LTD.

Fig.12. CRANKSHAFT WITH BEARING SHELLS

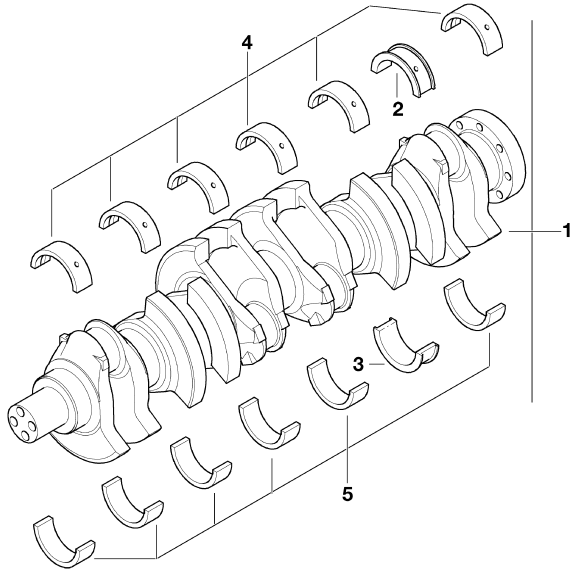

Remarks
(1)YELLOW
(2)GREEN
(3)WHITE

12. CRANKSHAFT WITH BEARING SHELLS

(A)=6BY2-220
(B)=6BY2-260
(C)=6BY2-220Z
(D)=6BY2-260Z
(E)=
(F)=

REF.	LEV.	PARTS NO.	DESCRIPTION	Q'TY (A)	(B)	(C)	(D)	(E)	(F)	I	R
1	1	165000-68850	CRANKSHAFT ASSY	1	1	1	1				
2AG	1	165000-68650	GUIDE, SHILL 60.00MM	1	1	1	1				2
2AW	1	165000-68660	GUIDE, SHILL 60.00MM	1	1	1	1				3
2AY	1	165000-68640	GUIDE, SHILL 60.00MM	1	1	1	1				1
2BG	1	165000-68680	GUIDE, 59.75MM +0.25	1	1	1	1				2
2BW	1	165000-68690	GUIDE, 59.75MM +0.25	1	1	1	1				3
2BY	1	165000-68670	GUIDE, 59.75MM +0.25	1	1	1	1				1
2CG	1	165000-68710	GUIDE, 59.50MM +0.50	1	1	1	1				2
2CW	1	165000-68720	GUIDE, 59.50MM +0.50	1	1	1	1				3
2CY	1	165000-68700	GUIDE, 59.50MM +0.50	1	1	1	1				1
3AG	1	165000-68740	GUIDE, SHILL 60.00MM	1	1	1	1				2
3AW	1	165000-68750	GUIDE, SHILL 60.00MM	1	1	1	1				3
3AY	1	165000-68730	GUIDE, SHILL 60.00MM	1	1	1	1				1
3BG	1	165000-68770	GUIDE, 59.75MM +0.25	1	1	1	1				2
3BW	1	165000-68780	GUIDE, 59.75MM +0.25	1	1	1	1				3
3BY	1	165000-68760	GUIDE, 59.75MM +0.25	1	1	1	1				1
3CG	1	165000-68800	GUIDE, 59.50MM +0.50	1	1	1	1				2
3CW	1	165000-68810	GUIDE, 59.50MM +0.50	1	1	1	1				3
3CY	1	165000-68790	GUIDE, 59.50MM +0.50	1	1	1	1				1
4AG	1	165000-68560	SHELL, BEARING 60.00	6	6	6	6				2
4AW	1	165000-68570	SHELL, BEARING 60.00	6	6	6	6				3
4AY	1	165000-68550	SHELL, BEARING 60.00	6	6	6	6				1
4BG	1	165000-68590	SHELL, 59.75MM +0.25	6	6	6	6				2
4BW	1	165000-68600	SHELL, 59.75MM +0.25	6	6	6	6				3
4BY	1	165000-68580	SHELL, 59.75MM +0.25	6	6	6	6				1
4CG	1	165000-68620	SHELL, 59.50MM +0.50	6	6	6	6				2
4CW	1	165000-68630	SHELL, 59.50MM +0.50	6	6	6	6				3
4CY	1	165000-68610	SHELL, 59.50MM +0.50	6	6	6	6				1
5AG	1	165000-68470	SHELL, BEARING 60.00	6	6	6	6				2
5AW	1	165000-68480	SHELL, BEARING 60.00	6	6	6	6				3
5AY	1	165000-68460	SHELL, BEARING 60.00	6	6	6	6				1
5BG	1	165000-68500	SHELL, 59.75MM +0.25	6	6	6	6				2
5BW	1	165000-68510	SHELL, 59.75MM +0.25	6	6	6	6				3
5BY	1	165000-68490	SHELL, 59.75MM +0.25	6	6	6	6				1
5CG	1	165000-68530	SHELL, 59.50MM +0.50	6	6	6	6				2
5CW	1	165000-68540	SHELL, 59.50MM +0.50	6	6	6	6				3
5CY	1	165000-68520	SHELL, 59.50MM +0.50	6	6	6	6				1

N:Old $\overset{\text{Yes}}{\underset{\text{No}}{\leftrightarrow}}$ New, Q:Old $\overset{\text{No}}{\underset{\text{Yes}}{\leftrightarrow}}$ New, R:Old $\overset{\text{Yes}}{\underset{\text{Yes}}{\leftrightarrow}}$ New, S:Old $\overset{\text{No}}{\underset{\text{No}}{\leftrightarrow}}$ New, W:Add, Z:Discontinued, F:Interchangeable by set, K:Q'ty Change

(C)Copy Rights YANMAR CO.,LTD.

Fig.13. FLYWHEEL & CYL.MOUNTING PARTS

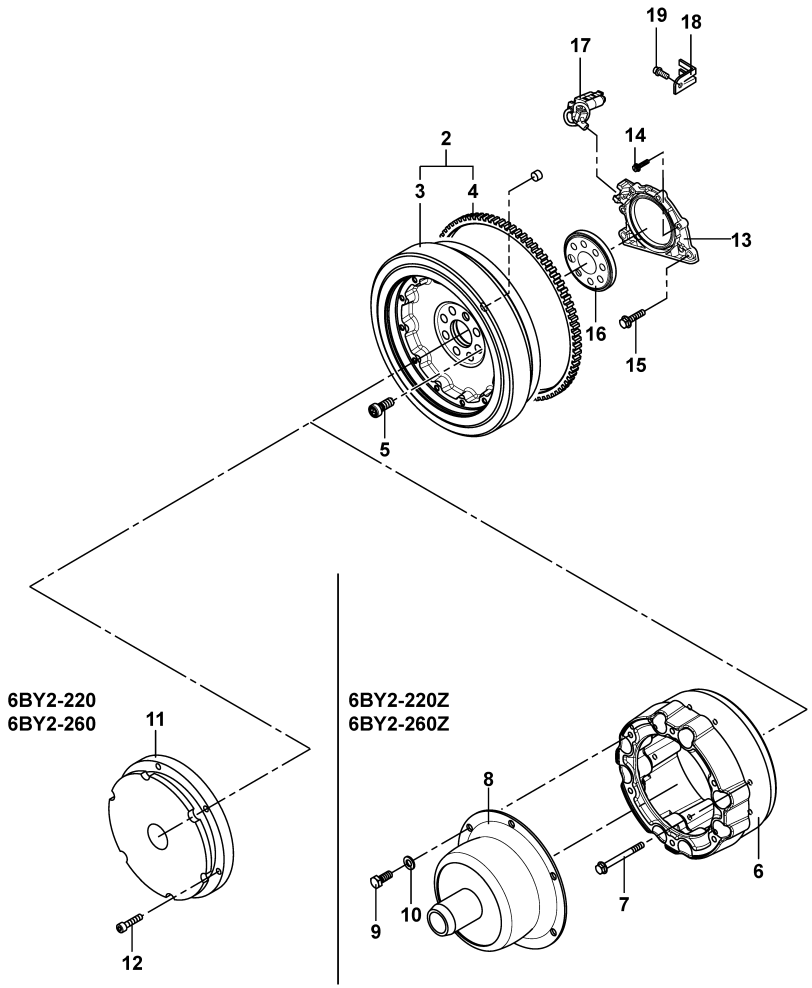

13. FLYWHEEL & CYL.MOUNTING PARTS

(A)=6BY2-220
(B)=6BY2-260
(C)=6BY2-220Z
(D)=6BY2-260Z
(E)=
(F)=

REF.	LEV.	PARTS NO.	DESCRIPTION	Q'TY (A)	(B)	(C)	(D)	(E)	(F)	I	R
2	1	120661-21400	FLYWHHEL ASSY	1	1	1	1				
3	2	120661-21410	FLYWHHEL	1	1	1	1				
4	2	120660-21420	GEAR, RING	1	1	1	1				
5	1	120640-00240	CAP BOLT, FLYWHEEL	8	8	8	8				
6	1	120661-21470	FLYWHEEL ADAPTER			1	1				
7	1	120640-01880	FLANGE BOLT, 8X50			8	8				
8	1	120650-21500	COUPLING, DAMPER			1	1				
9	1	120640-01560	BOLT, 10X25			6	6				
10	1	120640-02210	WASHER, 10			6	6				
11	1	120652-21603	COUPLING,DAMPER DS22	1	1						
12	1	120640-01540	CAP BOLT, 8X35	6	6						
13	1	165000-68440	CAP, W/SEAL	1	1	1	1				
14	1	165000-66930	BOLT, HEX M6 25	4	4	4	4				
15	1	165000-67120	BOLT, HEX M8 28	2	2	2	2				
16	1	165000-93310	WHEEL,GENERATOR	1	1	1	1				
17	1	165000-70680	SENSOR, CRANKSHAFT	1	1	1	1				
18	1	165000-70690	TERMINAL, PLUG	1	1	1	1				
19	1	165000-67360	SCREW, M6X12	1	1	1	1				

N:Old ◄Yes/No► New, Q:Old ◄No/Yes► New, R:Old ◄Yes/Yes► New, S:Old ◄No/No► New, W:Add, Z:Discontinued, F:Interchangeable by set, K:Q'ty Change

(C)Copy Rights YANMAR CO.,LTD.

Fig.14. PISTON & CONNECTING ROD

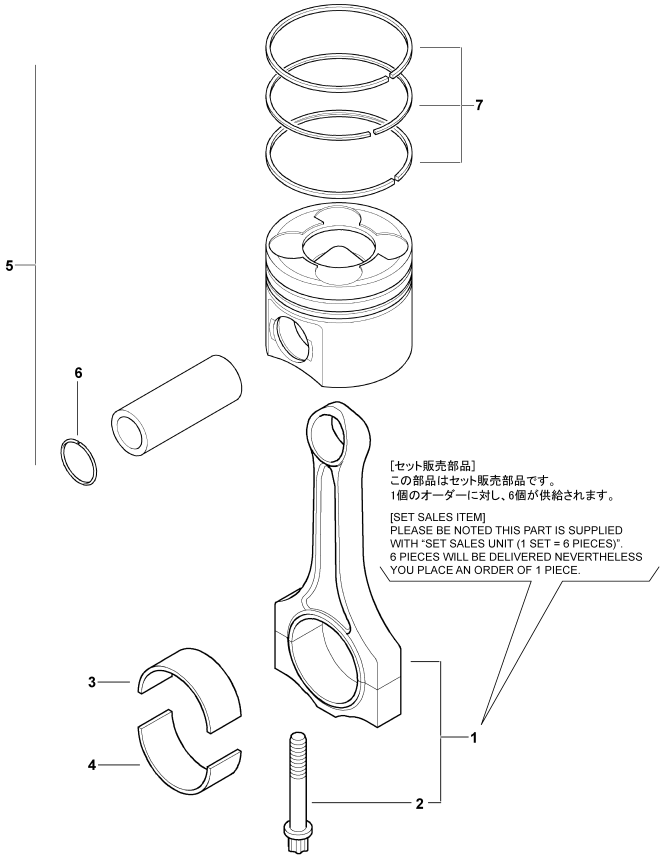

Remarks
(1)COLOR BLUE S MARK (ONLY IN CONJUNCTION WITH P/N 165000-69000)
(2)COLOR RED S MARK (ONLY IN CONJUNCTION WITH P/N 165000-69010)
(3)COLOR BLUE S MARK (ONLY IN CONJUNCTION WITH P/N 165000-69020)
(4)COLOR RED S MARK (ONLY IN CONJUNCTION WITH P/N 165000-69030)
(5)COLOR BLUE S MARK (ONLY IN CONJUNCTION WITH P/N 165000-69040)
(6)COLOR RED S MARK (ONLY IN CONJUNCTION WITH P/N 165000-69050)
(7)COLOR RED (ONLY IN CONJUNCTION WITH P/N 165000-68950)
(8)COLOR BLUE (ONLY IN CONJUNCTION WITH P/N 165000-68940)
(9)COLOR RED (ONLY IN CONJUNCTION WITH P/N 165000-68970)
(A)COLOR BLUE (ONLY IN CONJUNCTION WITH P/N 165000-68960)
(B)COLOR RED (ONLY IN CONJUNCTION WITH P/N 165000-68990)
(C)COLOR BLUE (ONLY IN CONJUNCTION WITH P/N 165000-68980)

14. PISTON & CONNECTING ROD

(A)=6BY2-220
(B)=6BY2-260
(C)=6BY2-220Z
(D)=6BY2-260Z
(E)=
(F)=

REF.	LEV.	PARTS NO.	DESCRIPTION	Q'TY (A)	(B)	(C)	(D)	(E)	(F)	I	R
1	1	165000-69060	ROD, RMFD CONNECTING	1	1	1	1				
2	1	165000-68930	BOLT, CONNECTING ROD	12	12	12	12				
3A	1	165000-68950	SHELL, BEARING 45.00	6	6	6	6				1
3B	1	165000-68940	SHELL, BEARING 45.00	6	6	6	6				2
3C	1	165000-68970	SHELL, 44.75MM +0.25	6	6	6	6				3
3D	1	165000-68960	SHELL, 44.75MM +0.25	6	6	6	6				4
3E	1	165000-68990	SHELL, 44.50MM +0.50	6	6	6	6				5
3F	1	165000-68980	SHELL, 44.50MM +0.50	6	6	6	6				6
4A	1	165000-69000	SHELL, BEARING 45.00	6	6	6	6				7
4B	1	165000-69010	SHELL, BEARING 45.00	6	6	6	6				8
4C	1	165000-69020	SHELL, 44.75MM +0.25	6	6	6	6				9
4D	1	165000-69030	SHELL, 44.75MM +0.25	6	6	6	6				A
4E	1	165000-69040	SHELL, 44.50MM +0.50	6	6	6	6				B
4F	1	165000-69050	SHELL, 44.50MM +0.50	6	6	6	6				C
5	1	165000-69100	PISTON, MAHLE	6	6	6	6				
6	2	165000-69070	RING, LOCK	12	12	12	12				
7	2	165000-69080	RING SET, PISTON	6	6	6	6				
7A	1	165000-69090	RING SET, PISTON .25	6	6	6	6				

N:Old $\frac{\text{Yes}}{\text{No}}$ New, Q:Old $\frac{\text{No}}{\text{Yes}}$ New, R:Old $\frac{\text{Yes}}{\text{Yes}}$ New, S:Old $\frac{\text{No}}{\text{No}}$ New, W:Add, Z:Discontinued, F:Interchangeable by set, K:Q'ty Change

(C)Copy Rights YANMAR CO.,LTD.

Fig.15. TIMING CHAIN LOWER P/DAMPER

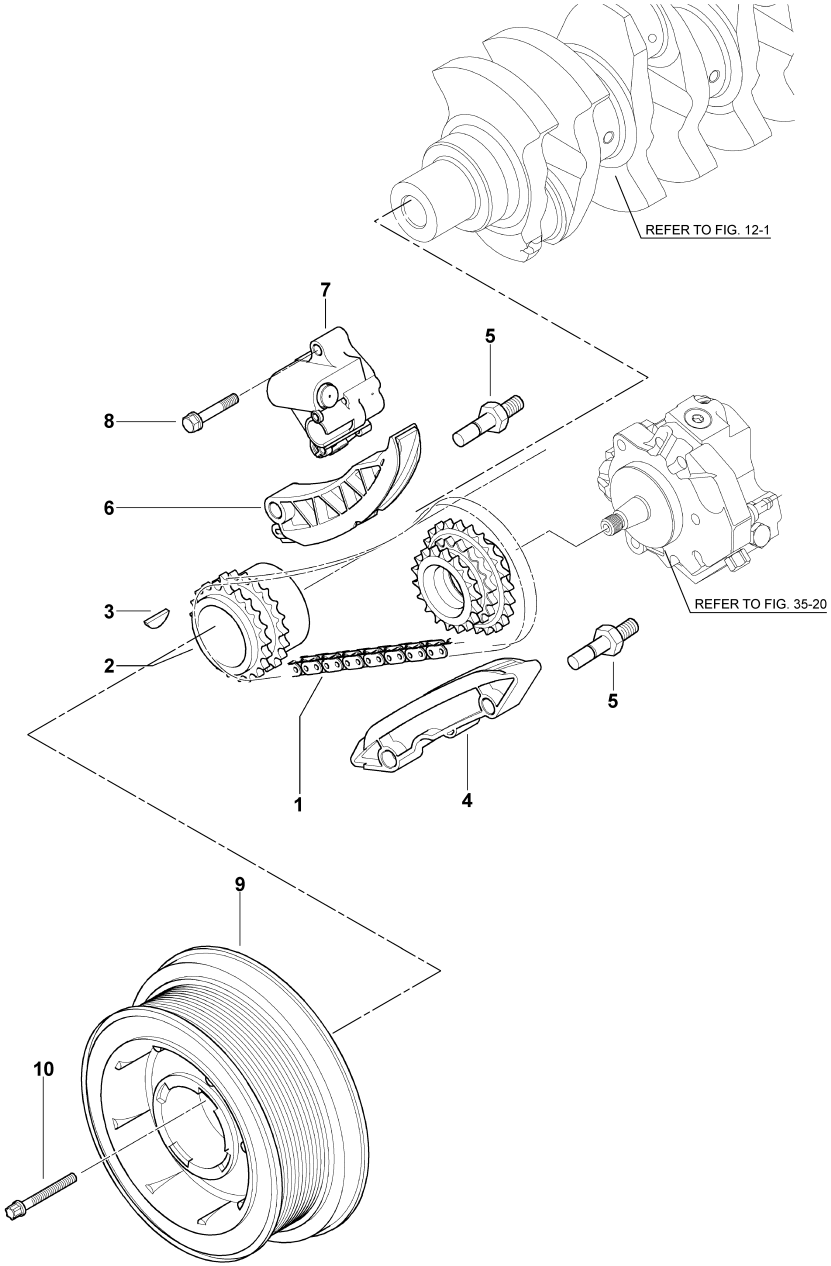

15. TIMING CHAIN LOWER P/DAMPER

(A)=6BY2-220
(B)=6BY2-260
(C)=6BY2-220Z
(D)=6BY2-260Z
(E)=
(F)=

REF.	LEV.	PARTS NO.	DESCRIPTION	Q'TY (A)	(B)	(C)	(D)	(E)	(F)	I	R
1	1	165000-70260	CHAIN, TIMING	1	1	1	1				
2	1	165001-35990	SPROCKET, CRANKSHAFT	1	1	1	1				
3	1	165000-67430	KEY, WOODRUFF 5X6.5	1	1	1	1				
4	1	165000-70230	RAIL, GUIDE	1	1	1	1				
5	1	165000-67730	BOLT, BEARING	3	3	3	3				
6	1	165000-70220	TENSIONER, CHAIN	1	1	1	1				
7	1	165000-70250	TENSIONER, CHAIN	1	1	1	1				
8	1	165000-67110	BOLT, HEX M6 30	3	3	3	3				
9	1	165000-68900	DAMPER, VIBRATION	1	1	1	1				
10	1	165000-68870	BOLT, TORX M10X86	4	4	4	4				

N:Old $\frac{\text{Yes}}{\text{No}}$ New, Q:Old $\frac{\text{No}}{\text{Yes}}$ New, R:Old $\frac{\text{Yes}}{\text{Yes}}$ New, S:Old $\frac{\text{No}}{\text{No}}$ New, W:Add, Z:Discontinued, F:Interchangeable by set, K:Q'ty Change

(C)Copy Rights YANMAR CO.,LTD.

Fig.16. TIMING GEAR TIMING CHAIN TOP

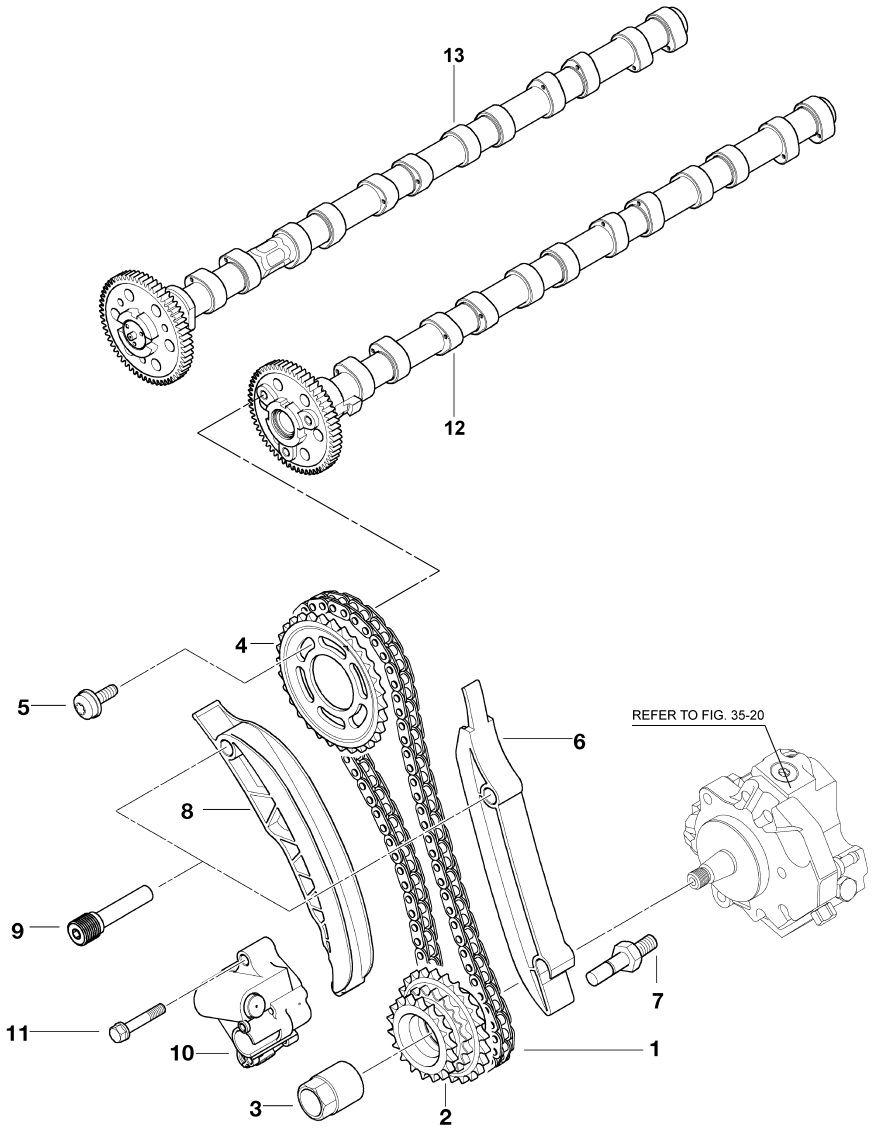

16. TIMING GEAR TIMING CHAIN TOP

(A)=6BY2-220
(B)=6BY2-260
(C)=6BY2-220Z
(D)=6BY2-260Z
(E)=
(F)=

REF.	LEV.	PARTS NO.	DESCRIPTION	Q'TY (A)	(B)	(C)	(D)	(E)	(F)	I	R
1	1	165000-69210	CHAIN, TIMING	1	1	1	1				
2	1	165000-70240	SPROCKET, PUMP	1	1	1	1				
3	1	165000-70210	NUT, HEXAGON M14X1.5	1	1	1	1				
4	1	165000-69240	SPROCKET, CAMSHAFT	1	1	1	1				
5	1	165000-69270	SCREW, ISA M7X18	3	3	3	3				
6	1	165000-69200	RAIL, GUIDE	1	1	1	1				
7	1	165000-67760	BOLT, BEARING	1	1	1	1				
8	1	165000-69190	TENSIONER, CHAIN	1	1	1	1				
9	1	165001-35830	BOLT, BEARING	2	2	2	2				
10	1	165000-70250	TENSIONER, CHAIN	1	1	1	1				
11	1	165000-67110	BOLT, HEX M6 30	3	3	3	3				
12	1	165000-69250	CAMSHAFT, INLET	1	1	1	1				
13	1	165000-69260	CAMSHAFT, OUTLET	1	1	1	1				

N:Old $\xleftrightarrow[\text{No}]{\text{Yes}}$ New, Q:Old $\xleftrightarrow[\text{Yes}]{\text{No}}$ New, R:Old $\xleftrightarrow[\text{Yes}]{\text{Yes}}$ New, S:Old $\xleftrightarrow[\text{No}]{\text{No}}$ New, W:Add, Z:Discontinued, F:Interchangeable by set, K:Q'ty Change

(C)Copy Rights YANMAR CO.,LTD.

Fig.17. V-BELT

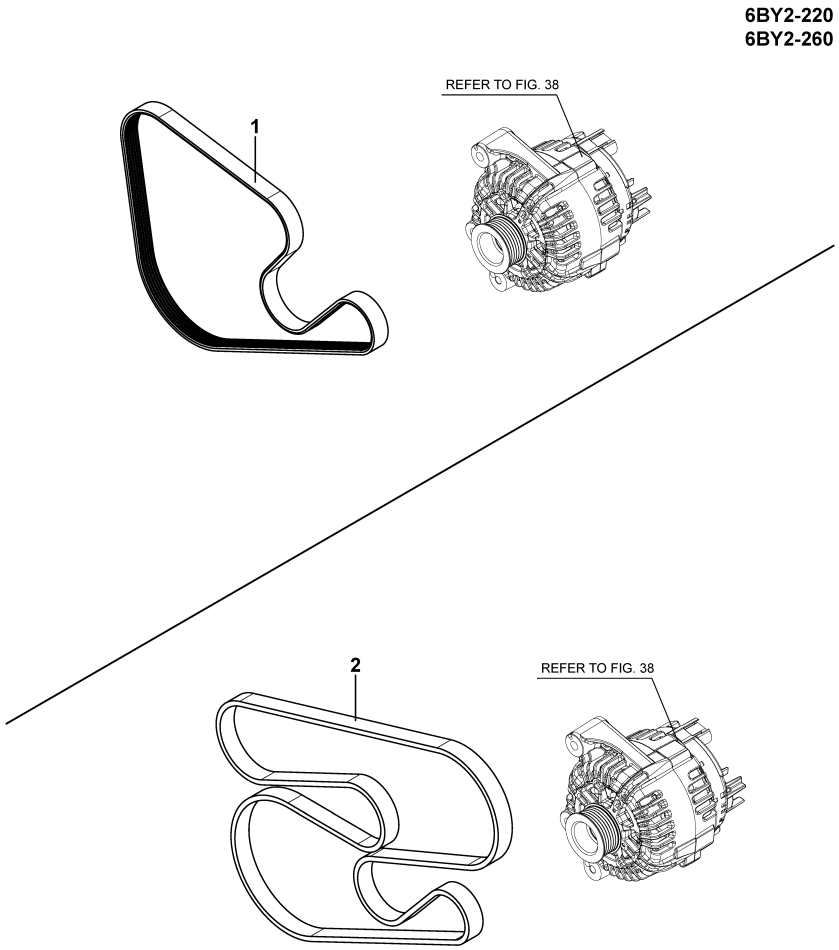

17. V-BELT

(A)=6BY2-220
(B)=6BY2-260
(C)=6BY2-220Z
(D)=6BY2-260Z
(E)=
(F)=

REF.	LEV.	PARTS NO.	DESCRIPTION	Q'TY (A)	(B)	(C)	(D)	(E)	(F)	I	R
1	1	120640-00010	V-BELT, 6PK1230	1	1						
2	1	120640-00020	V-BELT, 6PK 2080			1	1				

N:Old ◄Yes/No► New, Q:Old ◄No/Yes► New, R:Old ◄Yes/Yes► New, S:Old ◄No/No► New, W:Add, Z:Discontinued, F:Interchangeable by set, K:Q'ty Change

(C)Copy Rights YANMAR CO.,LTD.

Fig.18. LUB.OIL PUMP

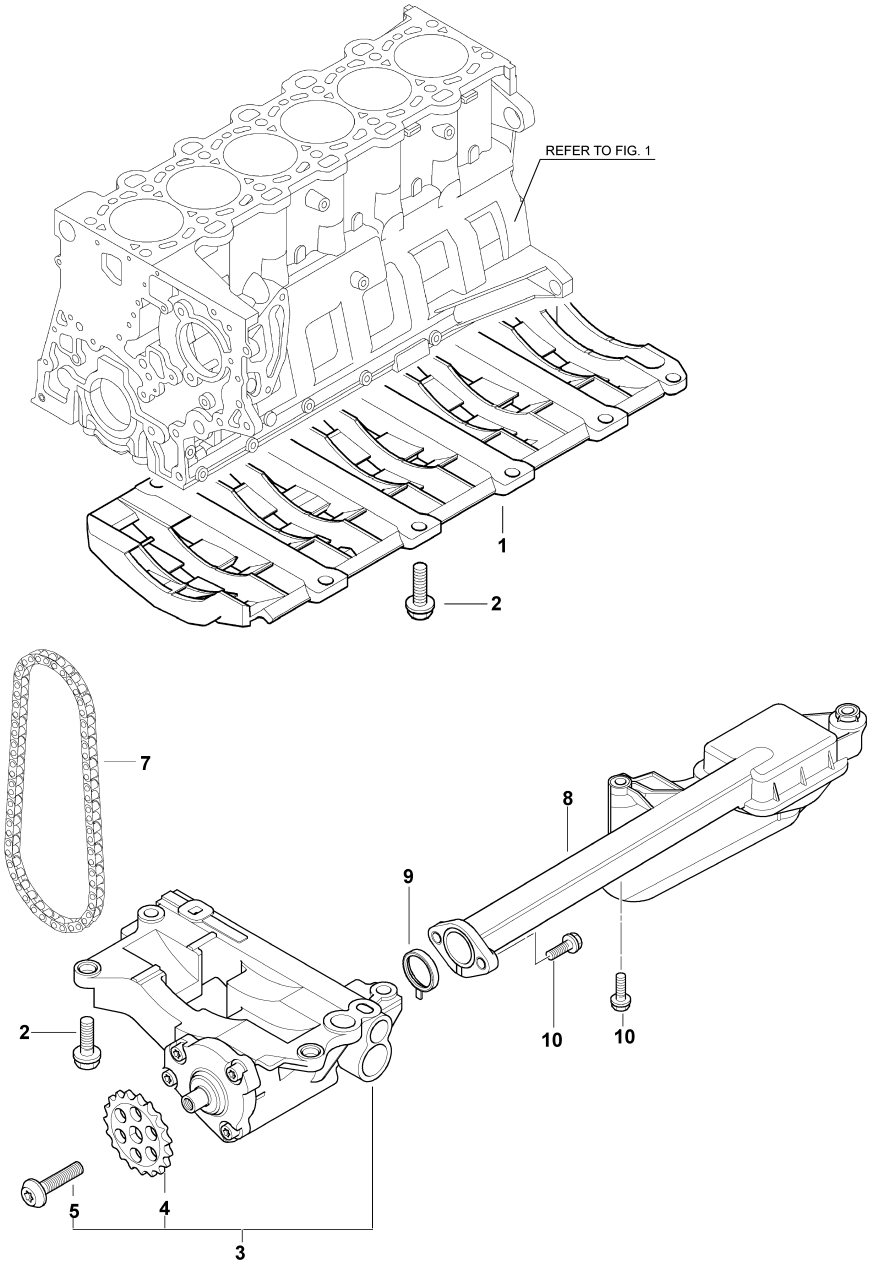

18. LUB.OIL PUMP

(A)=6BY2-220
(B)=6BY2-260
(C)=6BY2-220Z
(D)=6BY2-260Z
(E)=
(F)=

REF.	LEV.	PARTS NO.	DESCRIPTION	Q'TY (A)	(B)	(C)	(D)	(E)	(F)	I	R
1	1	165000-67810	REINFORCEMENT, BOWL	1	1	1	1				
2	1	165000-67280	BOLT, HEX M8 28	14	14	14	14				
3	1	165000-69410	PUMP, OIL	1	1	1	1				
4	2	165000-69370	SPROCKET, OIL PUMP	1	1	1	1				
5	2	165000-69390	BOLT, TORX M8X35	1	1	1	1				
7	1	165000-69400	CHAIN	1	1	1	1				
8	1	120660-32600	STRAINER ASSY, OIL	1	1	1	1				
9	1	165000-69430	GASKET, PROFILE	1	1	1	1				
10	1	165000-68320	SCREW, COLLAR M6X20	4	4	4	4				

N:Old $\xleftrightarrow[\text{No}]{\text{Yes}}$ New, Q:Old $\xleftrightarrow[\text{Yes}]{\text{No}}$ New, R:Old $\xleftrightarrow[\text{Yes}]{\text{Yes}}$ New, S:Old $\xleftrightarrow[\text{No}]{\text{No}}$ New, W:Add, Z:Discontinued, F:Interchangeable by set, K:Q'ty Change

(C)Copy Rights YANMAR CO.,LTD.

Fig.19. LUB.OIL FILTER

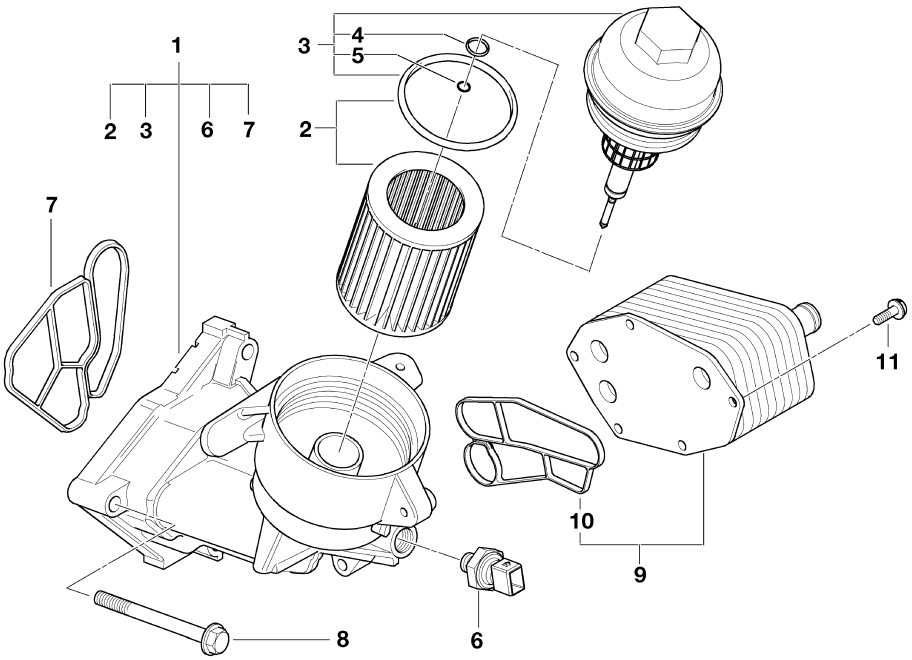

19. LUB.OIL FILTER

(A)=6BY2-220
(B)=6BY2-260
(C)=6BY2-220Z
(D)=6BY2-260Z
(E)=
(F)=

REF.	LEV.	PARTS NO.	DESCRIPTION	Q'TY (A)	(B)	(C)	(D)	(E)	(F)	I	R
1	1	165000-69550	FILTER ASSY, OIL	1	1	1	1				
2	2	165000-69590	ELEMENT, OIL FILTER	1	1	1	1				
3	2	165000-69630	COVER, OIL FILTER	1	1	1	1				
4	3	165000-69570	O-RING, 21.0 3.0	1	1	1	1				
5	3	165000-69580	O-RING, 8.80 2.67	1	1	1	1				
6	2	165001-35740	SWITCH, OIL PRESSURE	1	1	1	1				
7	2	165000-69560	GASKET, PROFILE	1	1	1	1				
8	1	165000-66950	BOLT, HEX M8X45	3	3	3	3				
9	1	165000-69600	EXCHANGER, HEAT	1	1	1	1				
10	2	165000-69610	GASKET, PROFILE	1	1	1	1				
11	1	165000-69620	BOLT, TORX M6X20	6	6	6	6				

N:Old $\xleftrightarrow[\text{No}]{\text{Yes}}$ New, Q:Old $\xleftrightarrow[\text{Yes}]{\text{No}}$ New, R:Old $\xleftrightarrow[\text{Yes}]{\text{Yes}}$ New, S:Old $\xleftrightarrow[\text{No}]{\text{No}}$ New, W:Add, Z:Discontinued, F:Interchangeable by set, K:Q'ty Change

(C)Copy Rights YANMAR CO.,LTD.

Fig.20. ROTARY PUMP(OPTION)

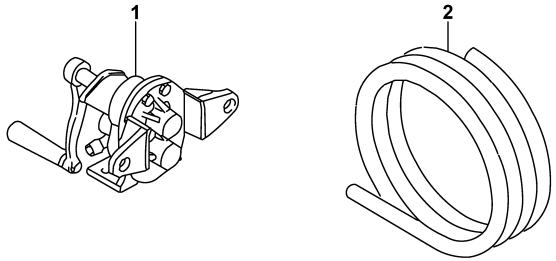

0CR10-G74800

20. ROTARY PUMP(OPTION)

(A)=6BY2-220
(B)=6BY2-260
(C)=6BY2-220Z
(D)=6BY2-260Z
(E)=
(F)=

REF.	LEV.	PARTS NO.	DESCRIPTION	Q'TY (A)	(B)	(C)	(D)	(E)	(F)	I	R
1	1	124413-39100	PUMP, OIL SUMP	1	1	1	1				
2	1	120130-39990	HOSE,OIL DRAIN 3M	1	1	1	1				

N:Old $\xleftarrow[\text{No}]{\text{Yes}}$ New, Q:Old $\xleftarrow[\text{Yes}]{\text{No}}$ New, R:Old $\xleftarrow[\text{Yes}]{\text{Yes}}$ New, S:Old $\xleftarrow[\text{No}]{\text{No}}$ New, W:Add, Z:Discontinued, F:Interchangeable by set, K:Q'ty Change

(C)Copy Rights YANMAR CO.,LTD.

Fig.21. LUB.OIL PIPE(TURBOCHARGER)

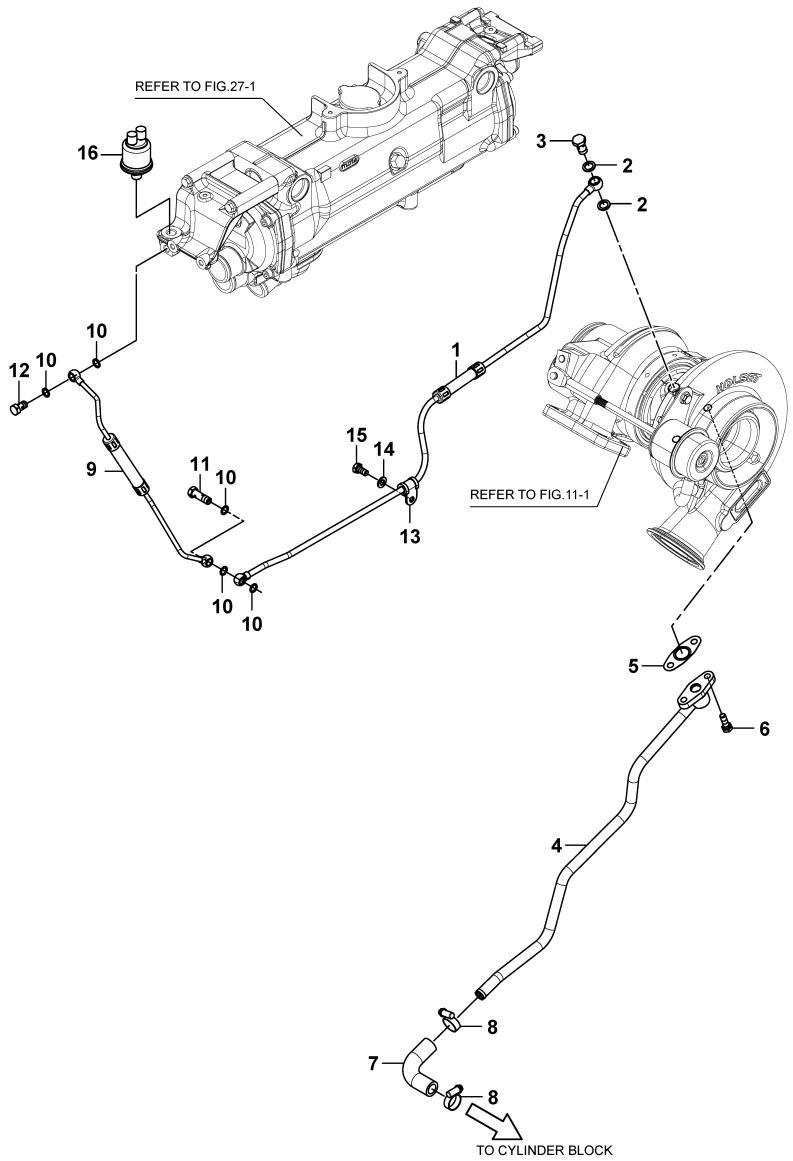

21. LUB.OIL PIPE(TURBOCHARGER)

(A)=6BY2-220
(B)=6BY2-260
(C)=6BY2-220Z
(D)=6BY2-260Z
(E)=
(F)=

REF.	LEV.	PARTS NO.	DESCRIPTION	Q'TY (A)	(B)	(C)	(D)	(E)	(F)	I	R
1	1	120661-39350	PIPE, OIL TURBO IN	1	1	1	1				
2	1	120640-00290	GASKET, 12X1.5	2	2	2	2				
3	1	120640-01430	BANJO BOLT, 12	1	1	1	1				
4	1	120661-39200	PIPE, OIL TURBO OUT	1	1	1	1				
5	1	120660-39310	GASKET, OIL RETURN	1	1	1	1				
6	1	120640-01580	BOLT, 8X25	2	2	2	2				
7	1	120650-39250	HOSE, TURBINE RETURN	1	1	1	1				
8	1	120640-01020	CLAMP, HOSE 16-27	2	2	2	2				
9	1	120650-39350	PIPE, OIL SENSOR	1	1	1	1				
10	1	120640-01210	GASKET, 10X1	5	5	5	5				
11	1	120650-39290	BANJO BOLT,10 DOUBLE	1	1	1	1				
12	1	120640-01410	BANJO BOLT, 10	1	1	1	1				
13	1	120650-85410	CLAMP, PIPE 10	1	1	1	1				
14	1	120640-02230	WASHER, 8	1	1	1	1				
15	1	120640-01510	BOLT, 8X16	1	1	1	1				
16	1	120650-39270	SENSOR, OIL PRESSURE	1	1	1	1				

N:Old $\xleftarrow[\text{No}]{\text{Yes}}$ New, Q:Old $\xleftarrow[\text{Yes}]{\text{No}}$ New, R:Old $\xleftarrow[\text{Yes}]{\text{Yes}}$ New, S:Old $\xleftarrow[\text{No}]{\text{No}}$ New, W:Add, Z:Discontinued, F:Interchangeable by set, K:Q'ty Change

(C)Copy Rights YANMAR CO.,LTD.

Fig.22. AIR COOLER

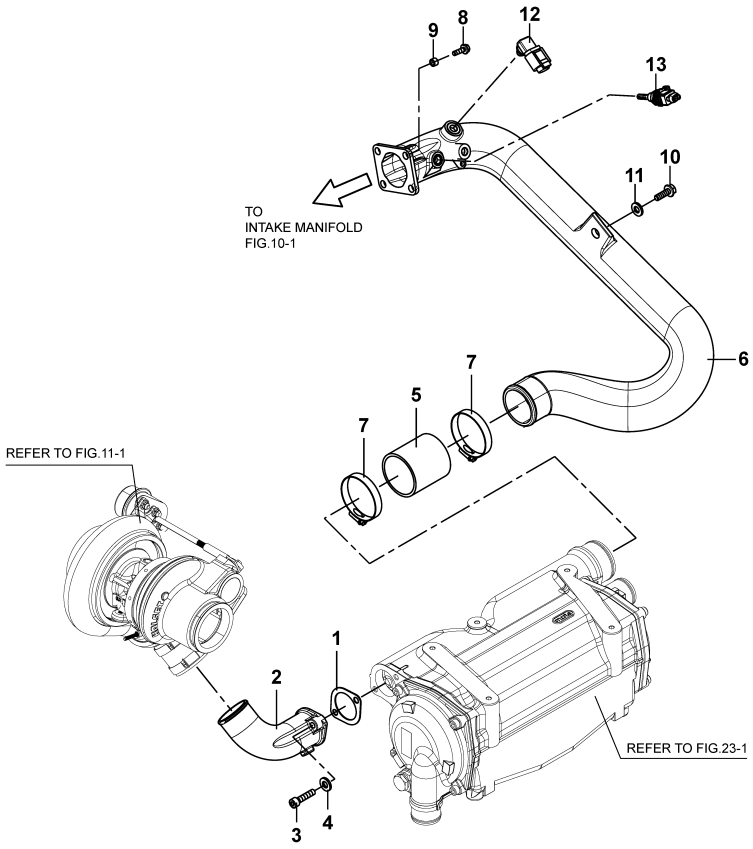

22. AIR COOLER

(A)=6BY2-220
(B)=6BY2-260
(C)=6BY2-220Z
(D)=6BY2-260Z
(E)=
(F)=

REF.	LEV.	PARTS NO.	DESCRIPTION	Q'TY (A)	(B)	(C)	(D)	(E)	(F)	I	R
1	1	120650-18850	GASKET, AIR CAC IN	1	1	1	1				
2	1	120660-18820	AIR DUCT, TURBO OUT	1	1	1	1				
3	1	120640-01540	CAP BOLT, 8X35	2	2	2	2				
4	1	120640-02230	WASHER, 8	2	2	2	2				
5	1	120650-18910	HOSE, CAC OUT	1	1	1	1				
6	1	120650-18830	AIR DUCT, CAC OUT	1	1	1	1				
7	1	120640-01050	CLAMP, HOSE 50-70	2	2	2	2				
8	1	120640-01590	CAP BOLT, 6X25	4	4	4	4				
9	1	120640-02220	WASHER, 6	4	4	4	4				
10	1	120640-01540	CAP BOLT, 8X35	1	1	1	1				
11	1	120640-02230	WASHER, 8	1	1	1	1				
12	1	120640-00140	SENSOR, BOOST P	1	1	1	1				
13	1	120640-00130	SENSOR, AIR TEMP	1	1	1	1				

N:Old $\xleftrightarrow[\text{No}]{\text{Yes}}$ New, Q:Old $\xleftrightarrow[\text{Yes}]{\text{No}}$ New, R:Old $\xleftrightarrow[\text{Yes}]{\text{Yes}}$ New, S:Old $\xleftrightarrow[\text{No}]{\text{No}}$ New, W:Add, Z:Discontinued, F:Interchangeable by set, K:Q'ty Change

(C)Copy Rights YANMAR CO.,LTD.

Fig.23. AIR COOLER(INNER PARTS)

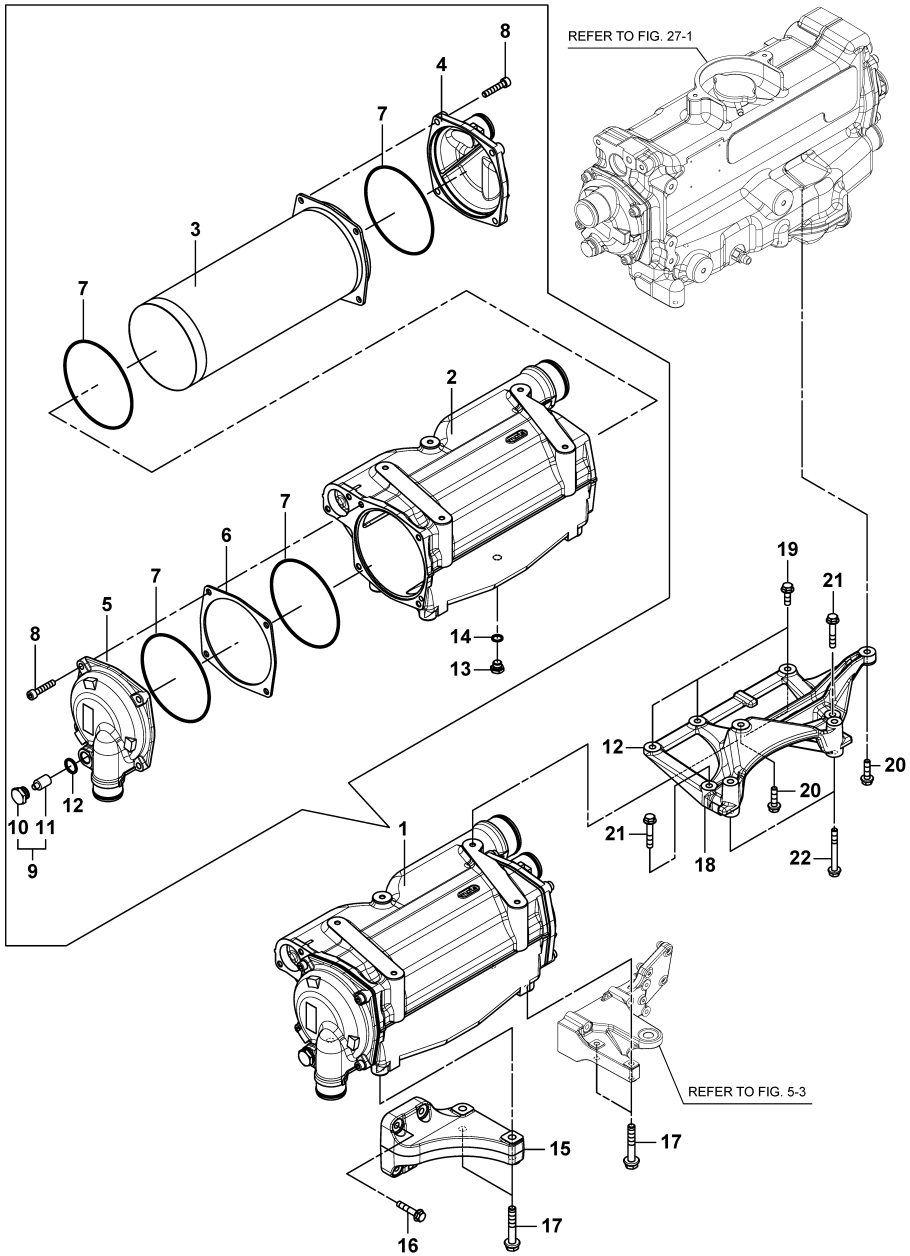

23. AIR COOLER(INNER PARTS)

(A)=6BY2-220
(B)=6BY2-260
(C)=6BY2-220Z
(D)=6BY2-260Z
(E)=
(F)=

REF.	LEV.	PARTS NO.	DESCRIPTION	Q'TY (A)	(B)	(C)	(D)	(E)	(F)	I	R
1	1	120661-18400	COOLER ASSY, AIR	1	1	1	1				
2	2	120661-18410	HOUSING, CAC 6BY	1	1	1	1				
3	2	120660-18420	TUBE STACK, 6BY	1	1	1	1				
4	2	120650-18430	COVER, CAC REAR	1	1	1	1				
5	2	120650-18440	COVER, CAC FRONT	1	1	1	1				
6	2	120650-18450	SPACER, CAC	1	1	1	1				
7	2	120650-18470	O-RING, CAC	4	4	4	4				
8	2	120650-18480	BOLT, M8X40	8	8	8	8				
9	2	120650-18490	ZING	1	1	1	1				
10	3	120650-18530	ZINC PLAG	1	1	1	1				
11	3	120650-18540	ZINC ANODE	1	1	1	1				
12	2	120650-18500	GASKET, CUPPER	1	1	1	1				
13	2	120650-18510	PLUG, DRAIN	1	1	1	1				
14	2	120650-18520	GASKET, CUPPER	1	1	1	1				
15	1	120660-18460	BRACKET, CAC REAR	1	1	1	1				
16	1	120640-01870	FLANGE BOLT, 8X40	4	4	4	4				
17	1	120640-01990	FLANGE BOLT, 10X60	4	4	4	4				
18	1	120660-44400	BRACKET, HEAT EXCHAN	1	1	1	1				
19	1	120640-02150	FLANGE BOLT, 8X25	3	3	3	3				
20	1	120640-01860	FLANGE BOLT, 8X30	2	2	2	2				
21	1	120640-02160	FLANGE BOLT, 8X45	2	2	2	2				
22	1	120640-01920	FLANGE BOLT, 8X70	2	2	2	2				

N:Old $\frac{\text{Yes}}{\text{No}}$ New, Q:Old $\frac{\text{No}}{\text{Yes}}$ New, R:Old $\frac{\text{Yes}}{\text{Yes}}$ New, S:Old $\frac{\text{No}}{\text{No}}$ New, W:Add, Z:Discontinued, F:Interchangeable by set, K:Q'ty Change

(C)Copy Rights YANMAR CO.,LTD.

Fig.24. WATER PUMP

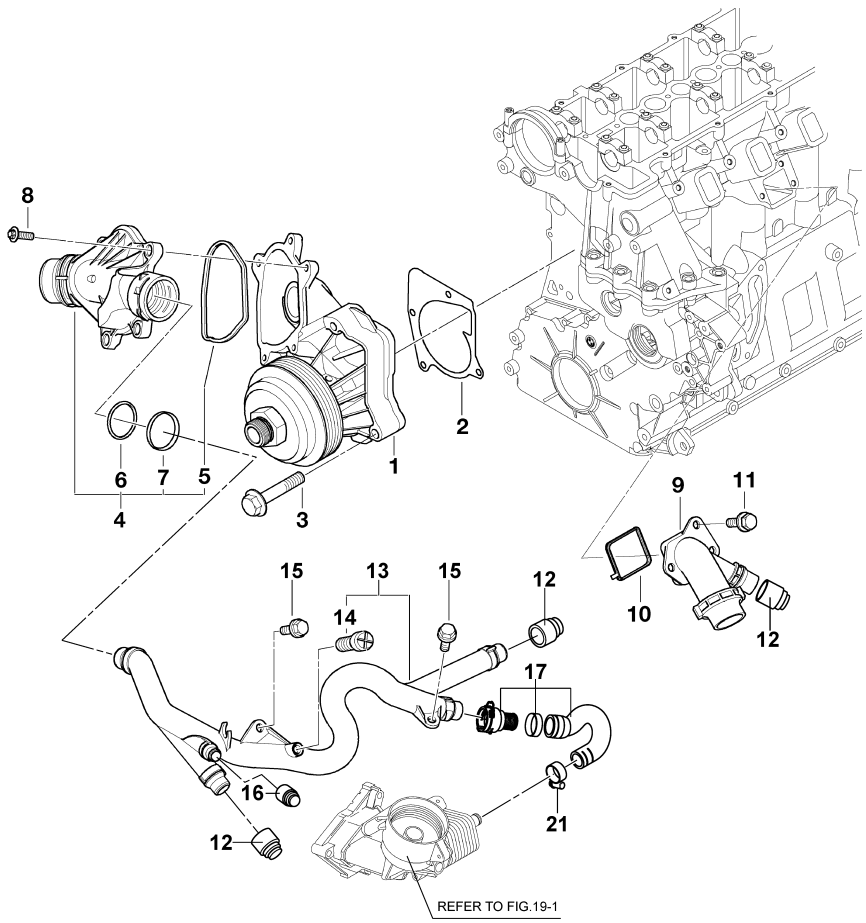

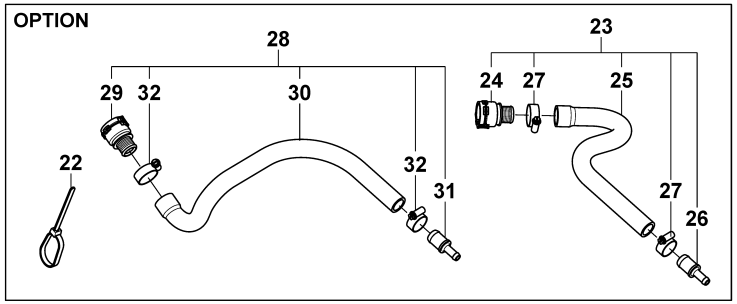

24. WATER PUMP

(A)=6BY2-220
(B)=6BY2-260
(C)=6BY2-220Z
(D)=6BY2-260Z
(E)=
(F)=

	REF.	LEV.	PARTS NO.	DESCRIPTION	Q'TY (A)	(B)	(C)	(D)	(E)	(F)	I	R
	1	1	165000-63610	PUMP, RMFD WATER	1	1	1	1				
	1A	1	165001-22380	PUMP, WATER	1	1	1	1				
	2	1	165000-69720	GASKET, STEEL	1	1	1	1				
	3	1	165000-69690	SCREW, TORX M7X38	4	4	4	4				
	4	1	165001-35710	THERMOSTAT ASSY	1	1	1	1				
	5	1	165000-69650	GASKET, PROFILE	1	1	1	1				
	6	1	165000-69660	O-RING	1	1	1	1				
	7	1	165000-69670	RING, BACKUP	1	1	1	1				
	8	1	165000-67240	BOLT,HEX M6X20	4	4	4	4				
	9	1	165001-35800	CONNECTOR	1	1	1	1				
	10	1	165000-67960	GASKET, PROFILE	1	1	1	1				
	11	1	165000-66930	BOLT, HEX M6 25	3	3	3	3				
	12	1	120650-49390	PLUG, QUICK 16	2	2	2	2				
	13	1	165001-35730	PIPE, RETURN	1	1	1	1				
	14	1	165000-69780	SCREW, VENT	1	1	1	1				
	15	1	165000-69360	SCREW, COLLAR M6X18	2	2	2	2				
	16	1	120650-49380	PLUG, QUICK 12	1	1	1	1				
	17	1	120650-49400	HOSE ASSY,OIL COOLER	1	1	1	1				
	21	1	120640-01020	CLAMP, HOSE 16-27	1	1	1	1				
	22	1	120640-09130	TIE,STRAP 550	1	1	1	1				
	23	1	120650-49850	HOSE ASSY, HEATER SU	1	1	1	1				
I	24	2	120650-49310	COUPLING, RAPID	1	1	1	1				
I	25	2	120650-49810	HOSE,HEATER SUPPLY	1	1	1	1				
I	26	2	120650-49830	HOSE,RESTRICTOR	1	1	1	1				
I	27	2	23000-028000	CLAMP 28	2	2	2	2				
I	28	1	120660-49860	HOSE ASSY, HEATER RE	1	1	1	1				
I	29	2	120650-49310	COUPLING, RAPID	1	1	1	1				
I	30	2	120660-49820	HOSE, HEATER RETURN	1	1	1	1				
I	31	2	120650-49830	HOSE,RESTRICTOR	1	1	1	1				
I	32	2	23000-028000	CLAMP 28	2	2	2	2				

N:Old $\frac{\text{Yes}}{\text{No}}$ New, Q:Old $\frac{\text{No}}{\text{Yes}}$ New, R:Old $\frac{\text{Yes}}{\text{Yes}}$ New, S:Old $\frac{\text{No}}{\text{No}}$ New, W:Add, Z:Discontinued, F:Interchangeable by set, K:Q'ty Change

(C)Copy Rights YANMAR CO.,LTD.

Fig.25. COOLING SEA WATER PUMP

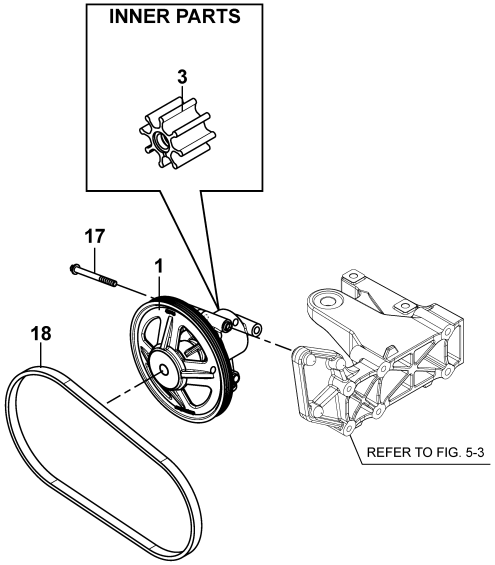

0CR10-G74800 25. COOLING SEA WATER PUMP

(A)=6BY2-220
(B)=6BY2-260
(C)=6BY2-220Z
(D)=6BY2-260Z
(E)=
(F)=

REF.	LEV.	PARTS NO.	DESCRIPTION	Q'TY (A)	(B)	(C)	(D)	(E)	(F)	I	R
1	1	120650-42300	PUMP, SEAWATER ASSY	1	1	1	1				
3	2	120650-42310	IMPELLER, PUMP	1	1	1	1				
17	1	120640-01550	TORX BOLT E10X80	3	3	3	3				
18	1	120650-42360	V-BELT, 4PK 964	1	1	1	1				

N:Old $\xleftrightarrow[\text{No}]{\text{Yes}}$ New, Q:Old $\xleftrightarrow[\text{Yes}]{\text{No}}$ New, R:Old $\xleftrightarrow[\text{Yes}]{\text{Yes}}$ New, S:Old $\xleftrightarrow[\text{No}]{\text{No}}$ New, W:Add, Z:Discontinued, F:Interchangeable by set, K:Q'ty Change

(C)Copy Rights YANMAR CO.,LTD.

Fig.26. HEAT EXCHANGER

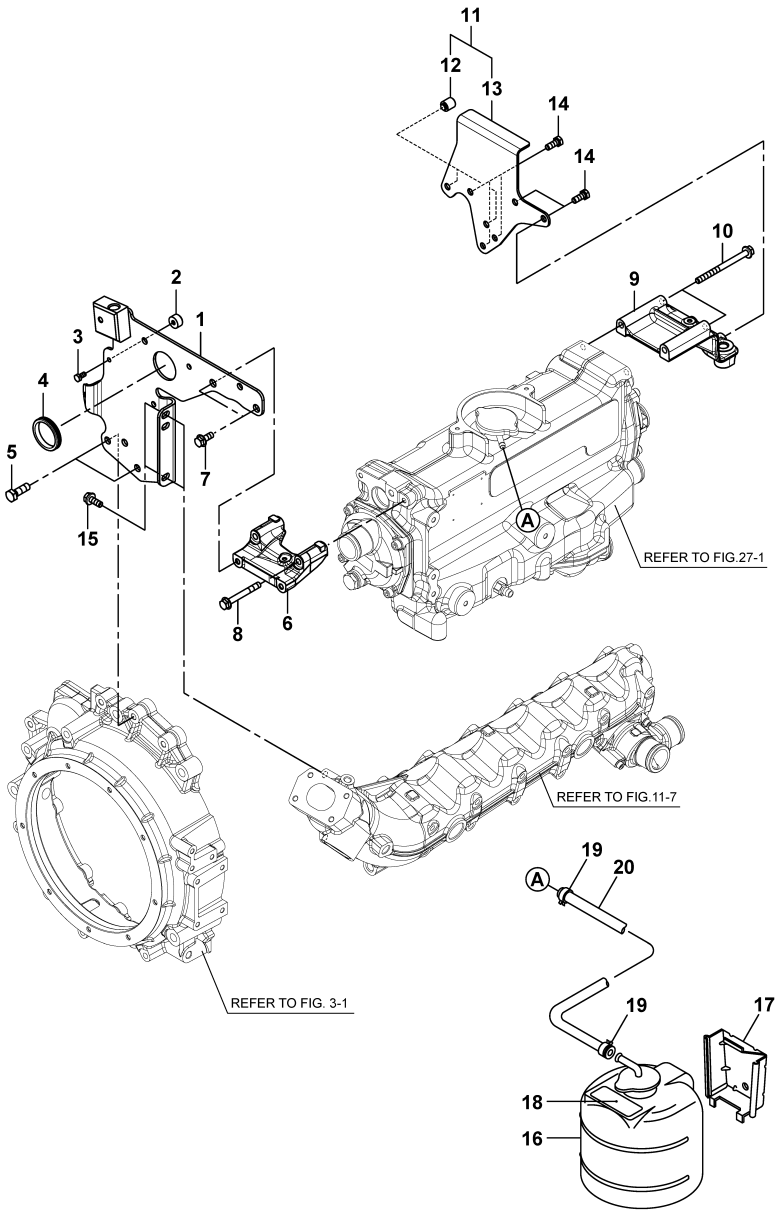

26. HEAT EXCHANGER

(A)=6BY2-220
(B)=6BY2-260
(C)=6BY2-220Z
(D)=6BY2-260Z
(E)=
(F)=

REF.	LEV.	PARTS NO.	DESCRIPTION	Q'TY (A)	(B)	(C)	(D)	(E)	(F)	I	R
1	1	120650-44150	BRACKET, H/E REAR	1	1	1	1				
2	1	120650-11440	SPACER,BRACKET REAR	1	1	1	1				
3	1	120640-01460	BOLT, 6X12	1	1	1	1				
4	1	120650-44220	SLEEVE,PROTECTING	1	1	1	1				
5	1	120640-01960	FLANGE BOLT, 10X30	2	2	2	2				
6	1	120650-44180	SPACER, H/E REAR	1	1	1	1				
7	1	120640-02140	FLANGE BOLT, 8X20	2	2	2	2				
8	1	120640-01910	FLANGE BOLT, 8X65	2	2	2	2				
9	1	120660-44210	SPACER, H/E FRONT	1	1	1	1				
10	1	120640-01940	FLANGEBOLT, 8X100	2	2	2	2				
11	1	120651-44190	BRACKET, H/E FRO	1	1	1	1				
12	2	120650-44230	BRACKET, H/E FRO	1	1	1	1				
13	2	120650-17370	SPACER	2	2	2	2				
14	1	120640-01520	BOLT, 8X20	5	5	5	5				
15	1	120640-02140	FLANGE BOLT, 8X20	2	2	2	2				
16	1	128397-44500	TANK ASSY, RESERVE	1	1	1	1				
17	1	128397-44510	BRACKET, SUB-TANK	1	1	1	1				
18	1	129670-44570	LABEL	1	1	1	1				
19	1	23010-013000	CLAMP 13	2	2	2	2				
20	1	129270-44501	PIPE,OVER FLOW	1	1	1	1				

N:Old $\frac{\text{Yes}}{\text{No}}$ New, Q:Old $\frac{\text{No}}{\text{Yes}}$ New, R:Old $\frac{\text{Yes}}{\text{Yes}}$ New, S:Old $\frac{\text{No}}{\text{No}}$ New, W:Add, Z:Discontinued, F:Interchangeable by set, K:Q'ty Change

(C)Copy Rights YANMAR CO.,LTD.

Fig.27. HEAT EXCHANGER(INNER PARTS)

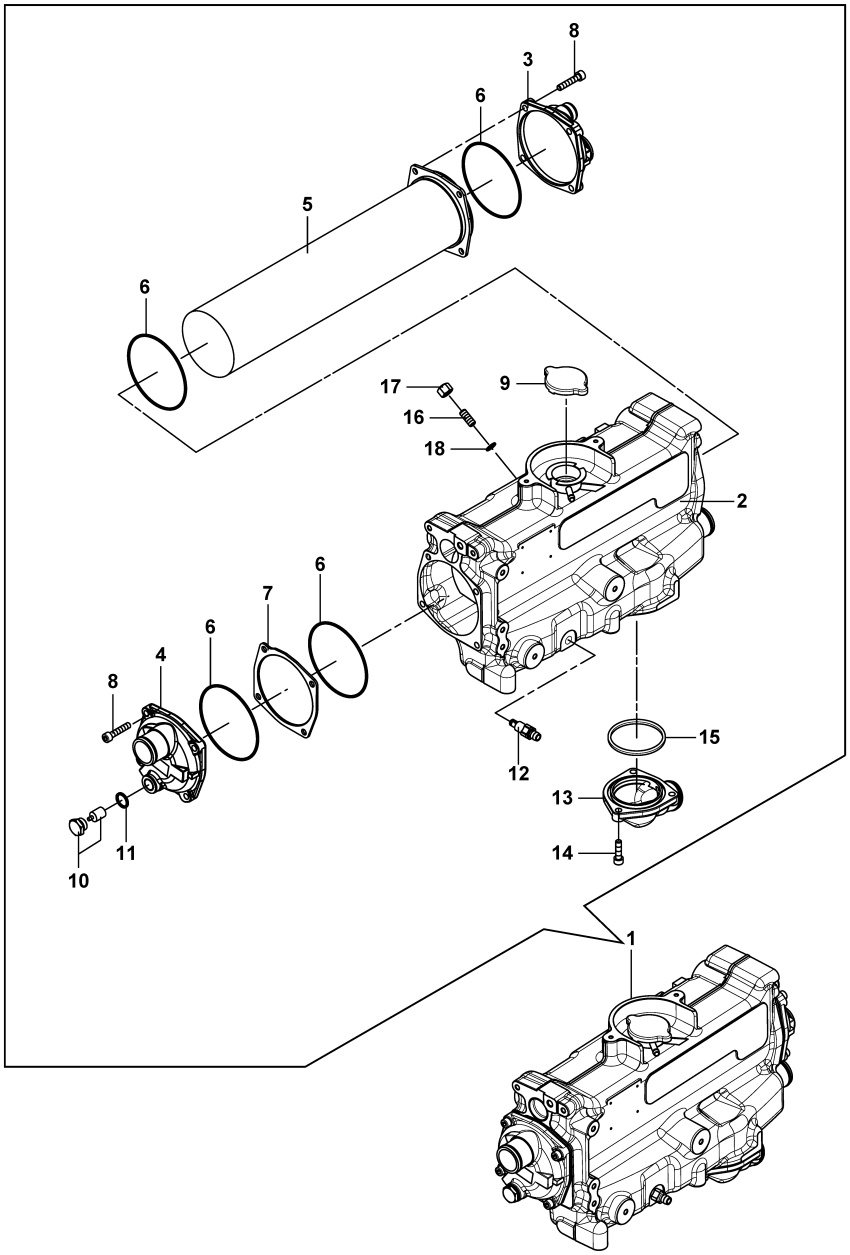

0CR10-G74800 27. HEAT EXCHANGER(INNER PARTS)

(A)=6BY2-220 (D)=6BY2-260Z
(B)=6BY2-260 (E)=
(C)=6BY2-220Z (F)=

REF.	LEV.	PARTS NO.	DESCRIPTION	Q'TY (A)	(B)	(C)	(D)	(E)	(F)	I	R
1	1	120661-44000	HEAT EXCHANGER ASSY	1	1	1	1				
2	2	120661-44010	HOUSING, H/E	1	1	1	1				
3	2	120650-44030	COVER,H/E REAR	1	1	1	1				
4	2	120650-44040	COVER,H/E FRONT	1	1	1	1				
5	2	120660-44020	CORE, H/E 6BY	1	1	1	1				
6	2	120650-44070	O-RING,H/E	4	4	4	4				
7	2	120650-44050	SPACER,H/E	1	1	1	1				
8	2	120650-18480	BOLT, M8X40	8	8	8	8				
9	2	120650-44090	CAP,FILLER	1	1	1	1				
10	2	120650-18490	ZING	1	1	1	1				
11	2	120650-18500	GASKET, CUPPER	1	1	1	1				
12	2	120650-49610	COCK, DRAIN	1	1	1	1				
13	2	120651-44500	BEND, H/E	1	1	1	1				
14	2	120651-44510	BOLT, 8X30	3	3	3	3				
15	2	120651-44520	O-RING, THERMOSTAT	1	1	1	1				
16	2	120660-44030	BOLT, M10X25	1	1	1	1				
17	2	120660-44040	NUT,M10	1	1	1	1				
18	2	120660-44050	WASHER, SEAL 10	1	1	1	1				

N:Old $\xleftrightarrow[\text{No}]{\text{Yes}}$ New, Q:Old $\xleftrightarrow[\text{Yes}]{\text{No}}$ New, R:Old $\xleftrightarrow[\text{Yes}]{\text{Yes}}$ New, S:Old $\xleftrightarrow[\text{No}]{\text{No}}$ New, W:Add, Z:Discontinued, F:Interchangeable by set, K:Q'ty Change

(C)Copy Rights YANMAR CO.,LTD.

Fig.28. HOSE, FW PUMP

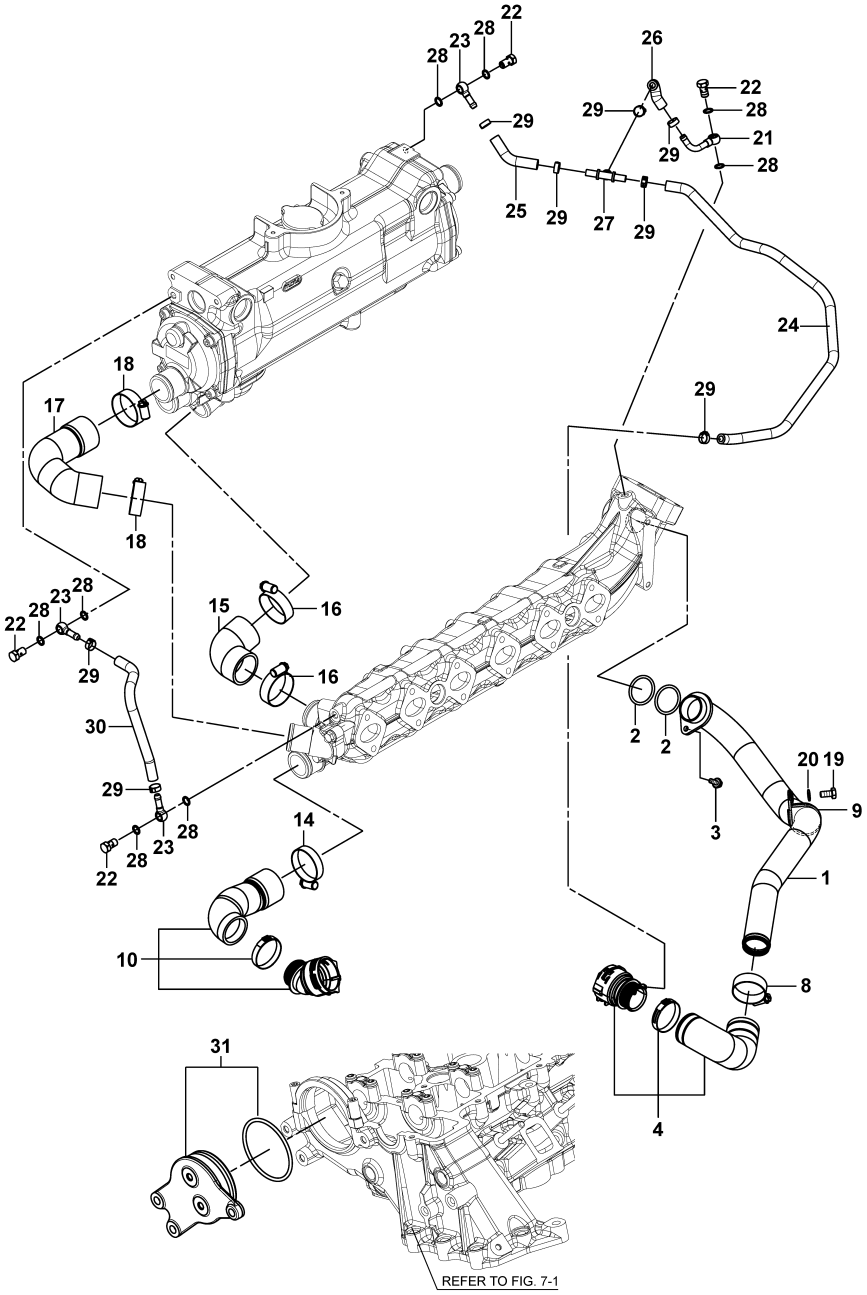

28. HOSE, FW PUMP

(A)=6BY2-220
(B)=6BY2-260
(C)=6BY2-220Z
(D)=6BY2-260Z
(E)=
(F)=

REF.	LEV.	PARTS NO.	DESCRIPTION	Q'TY (A)	(B)	(C)	(D)	(E)	(F)	I	R
1	1	120661-49250	PIPE ASSY, HEAD OUT	1	1	1	1				
2	1	120650-49260	O-RING, 36X3.5	2	2	2	2				
3	1	120640-02080	FLANGEBOLT, 6X16	1	1	1	1				
4	1	120650-49200	HOSE ASSY, HEAD OUT	1	1	1	1				
8	1	120650-49710	CLAMP, HOSE 35-50 C	1	1	1	1				
9	1	120650-49650	CLAMP, PIPE 38	1	1	1	1				
10	1	120661-49100	HOSE ASSY, ENGINE IN	1	1	1	1				
14	1	120650-49710	CLAMP, HOSE 35-50 C	1	1	1	1				
15	1	120651-44350	HOSE, H/E-THERMO	1	1	1	1				
16	1	120650-49710	CLAMP, HOSE 35-50 C	2	2	2	2				
17	1	120661-44530	HOSE, MANIFOLD-H/E	1	1	1	1				
18	1	120650-49710	CLAMP, HOSE 35-50 C	2	2	2	2				
19	1	120640-01510	BOLT, 8X16	1	1	1	1				
20	1	120640-02230	WASHER, 8	1	1	1	1				
21	1	120651-49420	PIPE, AIR BLEEDING	1	1	1	1				
22	1	120640-01410	BANJO BOLT, 10	4	4	4	4				
23	1	120650-49350	JOINT, BANJO 10	3	3	3	3				
24	1	120661-49330	HOSE, AIR BLEEDING	1	1	1	1				
25	1	120650-49430	HOSE, AIR BLEEDING	1	1	1	1				
26	1	120660-49450	HOSE, AIR BLEEDING	1	1	1	1				
27	1	120650-49460	JOINT, AIR BLEEDING	1	1	1	1				
28	1	120640-01210	GASKET, 10X1	8	8	8	8				
29	1	120650-55850	CLAMP, HOSE 1EAR 14	8	8	8	8				
30	1	120660-49440	HOSE, AIR BLEEDING	1	1	1	1				
31	1	120650-11650	COVER ASSY, PUMP	1	1	1	1				

N:Old ←Yes/No→ New, Q:Old ←No/Yes→ New, R:Old ←Yes/Yes→ New, S:Old ←No/No→ New, W:Add, Z:Discontinued, F:Interchangeable by set, K:Q'ty Change

(C)Copy Rights YANMAR CO.,LTD.

Fig.29. MIXING ELBOW

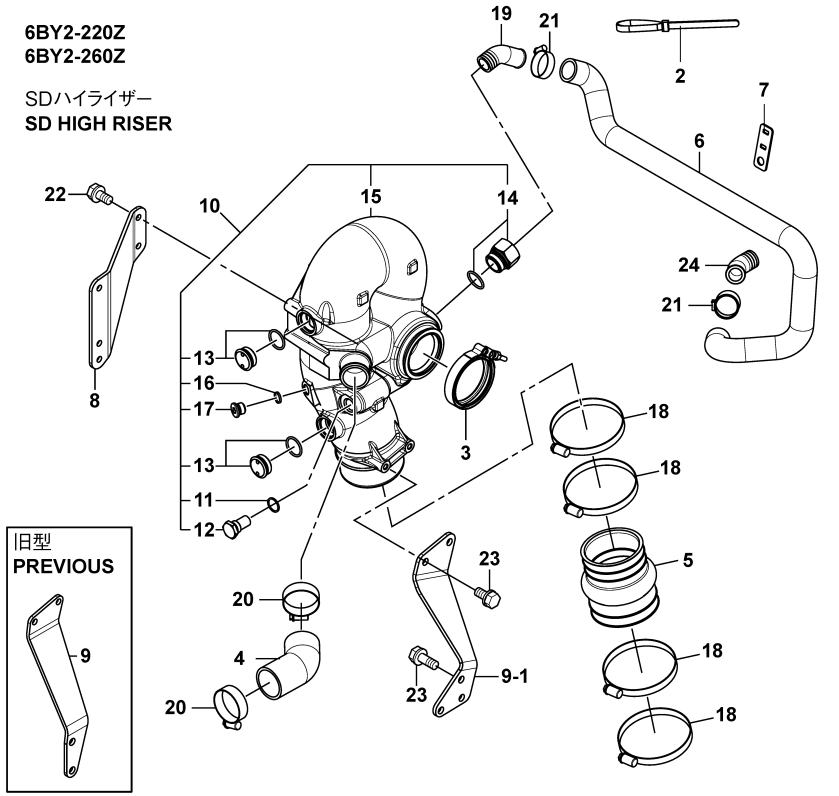

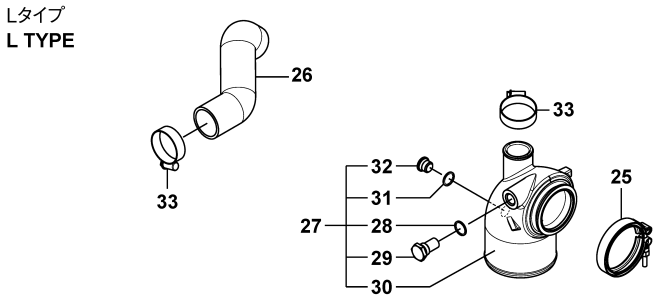

29. MIXING ELBOW

(A)=6BY2-220 (D)=6BY2-260Z
(B)=6BY2-260 (E)=
(C)=6BY2-220Z (F)=

REF.	LEV.	PARTS NO.	DESCRIPTION	Q'TY (A)	(B)	(C)	(D)	(E)	(F)	I	R
1	1	120640-00390	NUT, ISO7/16			1	1				
2	1	120640-09130	TIE STRAP			1	1				
3	1	120650-13450	V-CLAMP, TURBINE OUT			1	1				
4	1	120660-13510	HOSE, MIXING DRIVE			1	1				
5	1	120650-13520	HOSE, EXH PIPE			1	1				
6	1	120660-13810	HOSE, BYPASS			1	1				
7	1	120660-13820	SHEET, RETAINING			1	1				
8	1	120660-13881	BRACKET A, MIXING DR			1	1				
9	1	120660-13890	BRACKET B, MIXING DR			1	1				
9-1	1	120660-13891	BRACKET B, MIXING DR (C=E******) (D=E******)			1	1			S	
10	1	120650-13901	ELBOW ASY, MIXING DR			1	1				
11	2	120640-01270	RING, SEALING A18X22			1	1				
12	2	120650-13420	ZINC, ANTI-CORROSIVE			1	1				
13	2	120650-13430	PLUG, MIXING ELBOW			2	2				
14	2	120660-13470	ADAPTOR, BYPASS			1	1				
15	2	120650-13911	ELBOW, MIXING DRIVE			1	1				
16	2	23414-130000	GASKET, 13 X 1.0			1	1				
17	2	23893-020002	PLUG, G 1/4			1	1				
18	1	119172-48010	CLIP, HOSE			4	4				
19	1	119175-49550	BEND			1	1				
20	1	120650-49720	CLAMP, HOSE			2	2				
21	1	120650-49750	CLAMP, HOSE			2	2				
22	1	26106-080202	BOLT, 8 X 20			5	5				
23	1	26106-080202	BOLT, 8 X 20			5	5				
24	1	119175-49550	BEND			1	1				
25	1	120650-13450	V-CLAMP, TURBINE OUT	1	1						
26	1	120650-13870	HOSE, MIXING IN L45	1	1						
27	1	120650-13930	ELBOW ASSY, MIXING L	1	1						
28	2	120640-01270	RING, SEALING A18X22	1	1						
29	2	120650-13420	ZINC, ANTI-CORROSIVE	1	1						
30	2	120650-13940	ELBOW, MIXING L TYPE	1	1						
31	2	23414-130000	GASKET, 13 X 1.0	1	1						
32	2	23893-020002	PLUG, G 1/4	1	1						
33	1	120650-49720	CLAMP, HOSE	2	2						

N:Old $\frac{\text{Yes}}{\text{No}}$ New, Q:Old $\frac{\text{No}}{\text{Yes}}$ New, R:Old $\frac{\text{Yes}}{\text{Yes}}$ New, S:Old $\frac{\text{No}}{\text{No}}$ New, W:Add, Z:Discontinued, F:Interchangeable by set, K:Q'ty Change

(C)Copy Rights YANMAR CO.,LTD.

Fig.30. BILGE PUMP(OPTION)

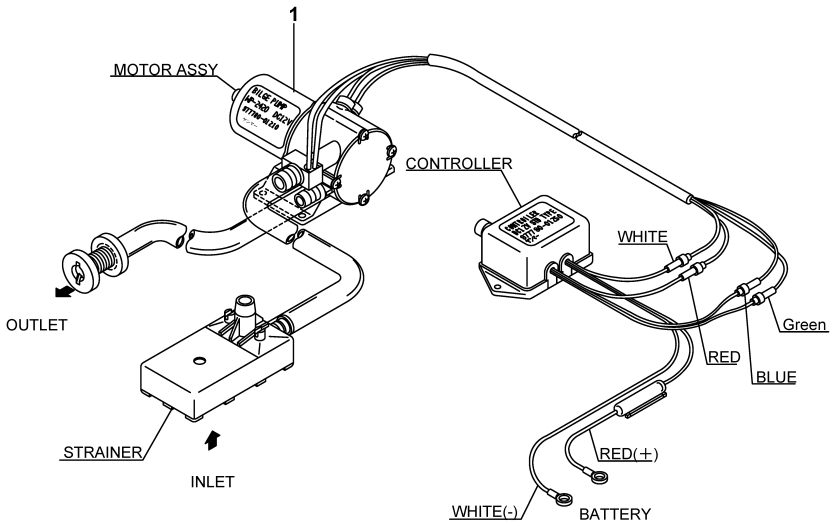

0CR10-G74800

30. BILGE PUMP(OPTION)

(A)=6BY2-220
(B)=6BY2-260
(C)=6BY2-220Z
(D)=6BY2-260Z
(E)=
(F)=

REF.	LEV.	PARTS NO.	DESCRIPTION	Q'TY (A)	(B)	(C)	(D)	(E)	(F)	I	R
1	1	127675-46012	PUMP,BILGE (12V	1	1	1	1				

N:Old ←Yes/No→ New, Q:Old ←No/Yes→ New, R:Old ←Yes/Yes→ New, S:Old ←No/No→ New, W:Add, Z:Discontinued, F:Interchangeable by set, K:Q'ty Change

(C)Copy Rights YANMAR CO.,LTD.

Fig.31. STEERING OIL COOLER

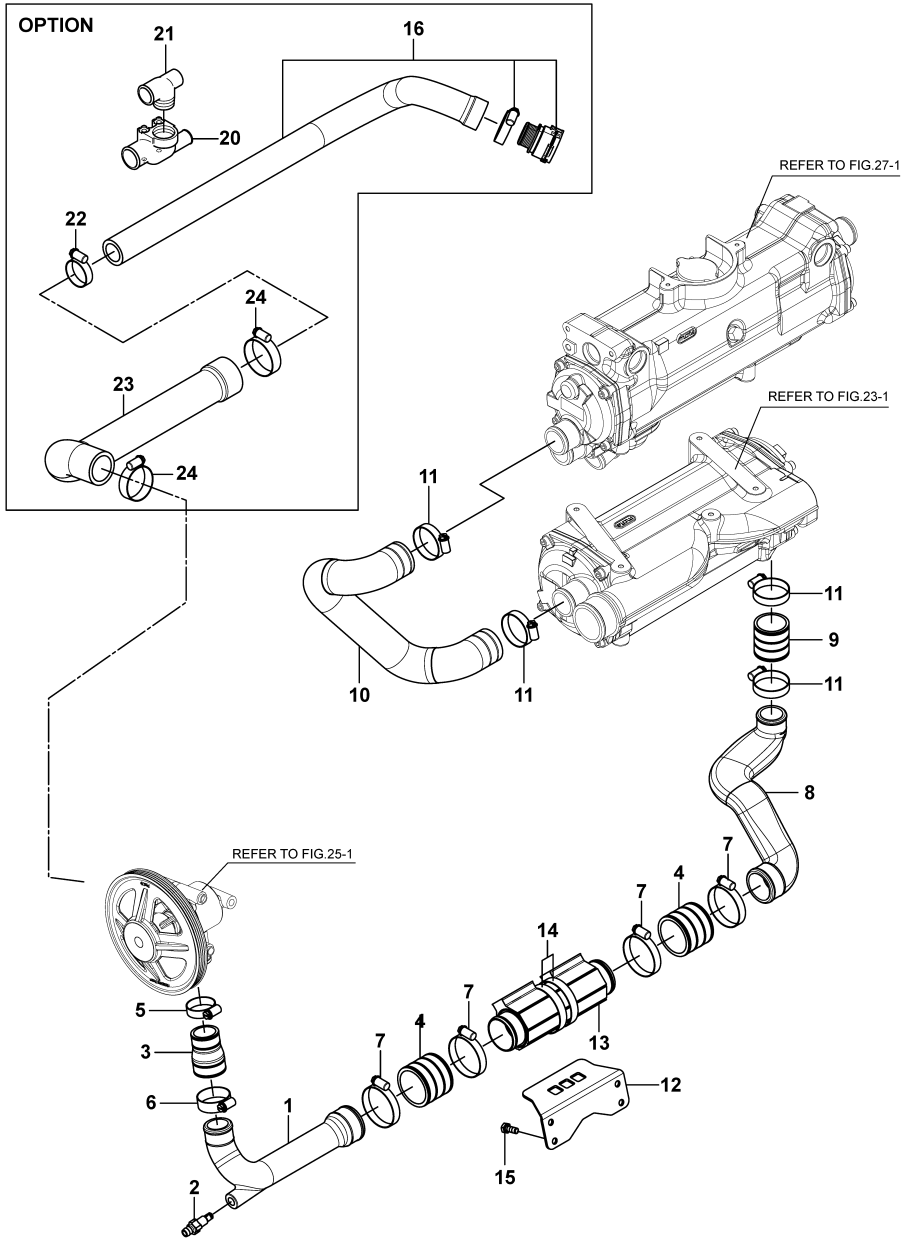

31. STEERING OIL COOLER

(A)=6BY2-220
(B)=6BY2-260
(C)=6BY2-220Z
(D)=6BY2-260Z
(E)=
(F)=

REF.	LEV.	PARTS NO.	DESCRIPTION	Q'TY (A)	(B)	(C)	(D)	(E)	(F)	I	R
1	1	120660-49540	PIPE, WATER PUMP OUT	1	1	1	1				
2	1	120650-49610	COCK, DRAIN	1	1	1	1				
3	1	120650-49520	HOSE, PUMP JOINT	1	1	1	1				
4	1	120650-49550	HOSE, COOLER JOINT	2	2	2	2				
5	1	120650-49710	CLAMP, HOSE 35-50 C	1	1	1	1				
6	1	120650-49710	CLAMP, HOSE 35-50 C	1	1	1	1				
7	1	120650-49720	CLAMP, HOSE 40-60 C	4	4	4	4				
8	1	120650-49580	PIPE, CAC IN	1	1	1	1				
9	1	120650-49590	HOSE, CAC IN	1	1	1	1				
10	1	120661-49560	HOSE, CAC-HE	1	1	1	1				
11	1	120650-49710	CLAMP, HOSE 35-50 C	4	4	4	4				
12	1	120650-33300	BRACKET, OIL COOLER	1	1	1	1				
13	1	120650-57010	COOLER, ATF GEAR OIL	1	1	1	1				
14	1	120640-01050	CLAMP, HOSE 50-70	2	2	2	2				
15	1	120640-01520	BOLT, 8X20	4	4	4	4				
16	1	120650-42620	HOSE ASY, DRIVE OUT			1	1				
20	1	119775-48640	JOINT, COOLING WATER			1	1				
21	1	119779-49050	JOINT, 3-WAY			1	1				
22	1	120650-49710	CLAMP, HOSE			1	1				
23	1	120650-42650	HOSE, PUMP IN SEAWAT	1	1	1	1				
24	1	120650-49720	CLAMP, HOSE	2	2	2	2				

N:Old $\frac{\text{Yes}}{\text{No}}$ New, Q:Old $\frac{\text{No}}{\text{Yes}}$ New, R:Old $\frac{\text{Yes}}{\text{Yes}}$ New, S:Old $\frac{\text{No}}{\text{No}}$ New, W:Add, Z:Discontinued, F:Interchangeable by set, K:Q'ty Change

(C)Copy Rights YANMAR CO.,LTD.

Fig.32. STEERING PUMP/PIPE

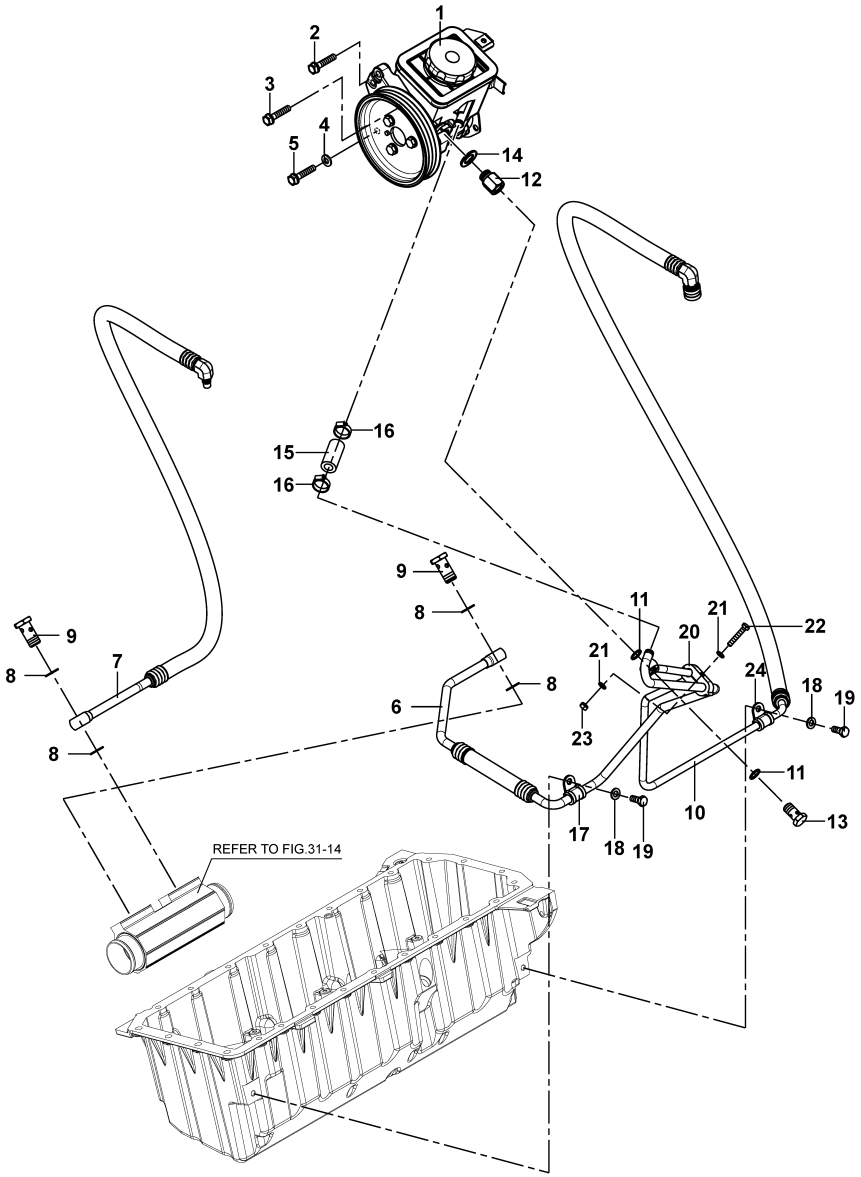

32. STEERING PUMP/PIPE

(A)=6BY2-220
(B)=6BY2-260
(C)=6BY2-220Z
(D)=6BY2-260Z
(E)=
(F)=

REF.	LEV.	PARTS NO.	DESCRIPTION	Q'TY (A)	(B)	(C)	(D)	(E)	(F)	I	R
1	1	120640-00150	PUMP ASSY, STEERING			1	1				
2	1	120640-01930	FLANGE BOLT, 8X80			1	1				
3	1	120640-01870	FLANGE BOLT, 8X40			1	1				
4	1	120640-02220	WASHER, 6			1	1				
5	1	120640-01570	BOLT, 6X80			1	1				
6	1	120660-85320	ATF-T, COOLER-PUMP			1	1				
7	1	120660-85360	ATF-T, DRIVE-COOLER			1	1				
8	1	120640-01260	GASKET, 17X1.5			4	4				
9	1	120650-85370	BANJO BOLT, G3/8			2	2				
10	1	120660-85330	ATF-T, PUMP-DRIVE			1	1				
11	1	120640-01240	GASKET, 14X1.5			2	2				
12	1	120650-57410	ADAPTER, ATF PUMP			1	1				
13	1	120640-01420	BANJO BOLT, 14			1	1				
14	1	120640-00300	GASKET, 16X1.5			1	1				
15	1	120650-57440	HOSE, ATF PUMP INLET			1	1				
16	1	120640-01020	CLAMP, HOSE 16-27			2	2				
17	1	120650-85390	CLAMP, PIPE 12			1	1				
18	1	120640-02230	WASHER, 8			2	2				
19	1	120640-01520	BOLT, 8X20			2	2				
20	1	120650-85430	CLAMP, PIPE DOUBLE			1	1				
21	1	120640-02220	WASHER, 6			2	2				
22	1	120640-01830	BOLT, 6X35			1	1				
23	1	120640-00200	NUT, M6			1	1				
24	1	120650-85410	CLAMP, PIPE 10			1	1				

N:Old ◄Yes/No► New, Q:Old ◄No/Yes► New, R:Old ◄Yes/Yes► New, S:Old ◄No/No► New, W:Add, Z:Discontinued, F:Interchangeable by set, K:Q'ty Change

(C)Copy Rights YANMAR CO.,LTD.

Fig.33. FUEL OIL FILTER/PIPE

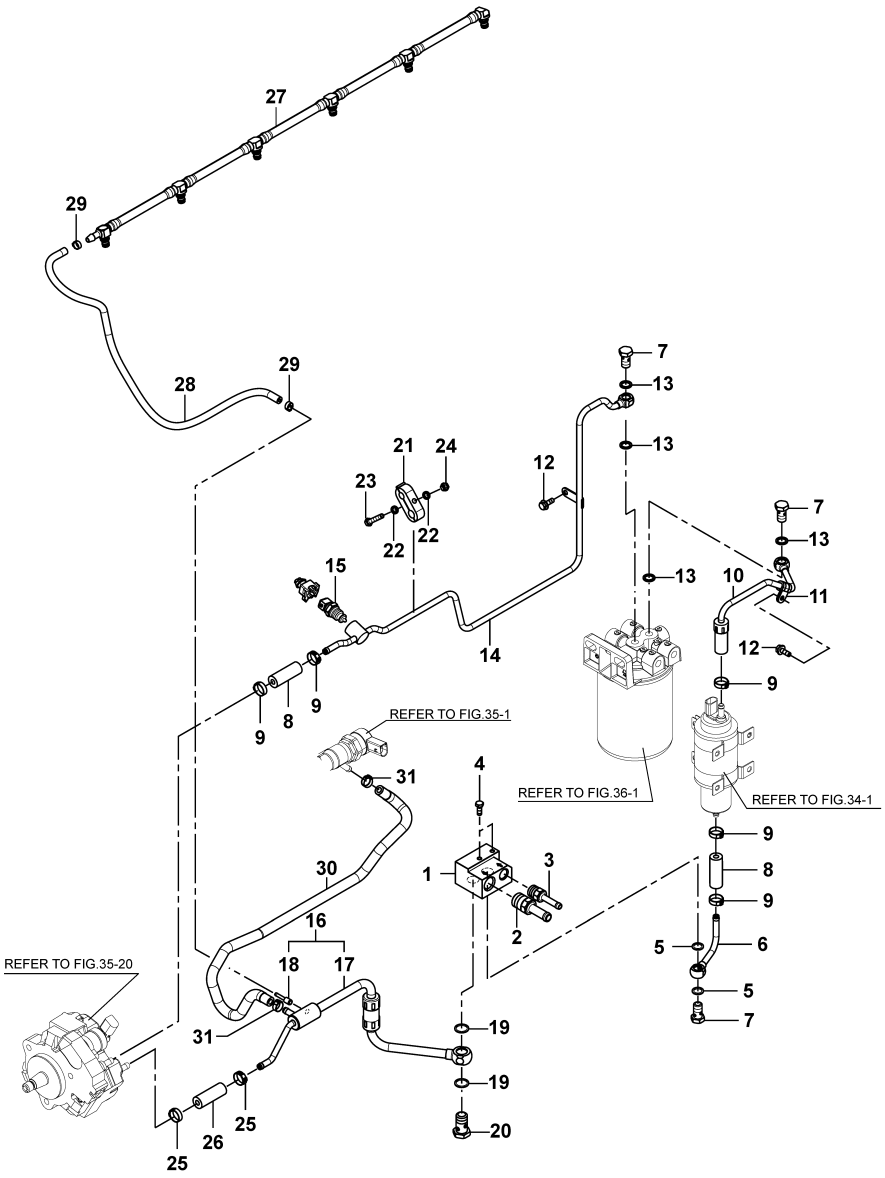

33. FUEL OIL FILTER/PIPE

(A)=6BY2-220
(B)=6BY2-260
(C)=6BY2-220Z
(D)=6BY2-260Z
(E)=
(F)=

REF.	LEV.	PARTS NO.	DESCRIPTION	Q'TY (A)	(B)	(C)	(D)	(E)	(F)	I	R
1	1	120650-55220	BLOCK ASSY,FO JOINT	1	1	1	1				
2	1	120650-55730	NIPPLE, FUEL RETURN	1	1	1	1				
3	1	120650-55720	NIPPLE,FUEL SUPPLY	1	1	1	1				
4	1	120640-01470	BOLT, 6X16	2	2	2	2				
5	1	120640-01230	GASKET, 12X1.5	2	2	2	2				
6	1	120651-55310	PIPE, FUEL BLOCK-PUM	1	1	1	1				
7	1	120640-01430	BANJO BOLT, 12	3	3	3	3				
8	1	120650-55320	HOSE, FUEL	2	2	2	2				
9	1	120650-55840	CLAMP,HOSE 1EAR 19.2	5	5	5	5				
10	1	120651-55340	PIPE, FUEL FILTER IN	1	1	1	1				
11	1	120650-39190	CLAMP, PIPE 8	1	1	1	1				
12	1	120640-02080	FLANGEBOLT, 6X16	2	2	2	2				
13	1	120640-01300	GASKET, 12X1.5	4	4	4	4				
14	1	120660-55300	PIPE,FUEL FILTER OUT	1	1	1	1				
15	1	120650-55710	SENSOR, FUEL TEMPERA	1	1	1	1				
16	1	120661-55330	PIPE,FO LINE RETURN	1	1	1	1				
17	2	120660-55290	PIPE,FO LINE RETURN	1	1	1	1				
18	2	120650-55660	VALVE,FUEL RETURN	1	1	1	1				
19	1	120640-01310	GASKET, 16X1.5	2	2	2	2				
20	1	120640-01400	BANJO BOLT, 16	1	1	1	1				
21	1	120650-85430	CLAMP, PIPE DOUBLE	1	1	1	1				
22	1	120640-02220	WASHER, 6	2	2	2	2				
23	1	120640-01830	BOLT, 6X35	1	1	1	1				
24	1	120640-00200	NUT, M6	1	1	1	1				
25	1	120650-55840	CLAMP,HOSE 1EAR 19.2	2	2	2	2				
26	1	120650-55320	HOSE, FUEL	1	1	1	1				
27	1	120660-55810	HOSE ASSY, FO RETURN	1	1	1	1				
28	1	120660-55820	HOSE,INJECTOR RETURN	1	1	1	1				
29	1	120650-55830	CLAMP,HOSE 1EAR 11.9	2	2	2	2				
30	1	120660-55630	HOSE,FO RAIL RETURN	1	1	1	1				
31	1	120650-55850	CLAMP,HOSE 1EAR 14.0	2	2	2	2				

N:Old $\xleftarrow[\text{No}]{\text{Yes}}$ New, Q:Old $\xleftarrow[\text{Yes}]{\text{No}}$ New, R:Old $\xleftarrow[\text{Yes}]{\text{Yes}}$ New, S:Old $\xleftarrow[\text{No}]{\text{No}}$ New, W:Add, Z:Discontinued, F:Interchangeable by set, K:Q'ty Change

(C)Copy Rights YANMAR CO.,LTD.

Fig.34. PUMP, FUEL LOW

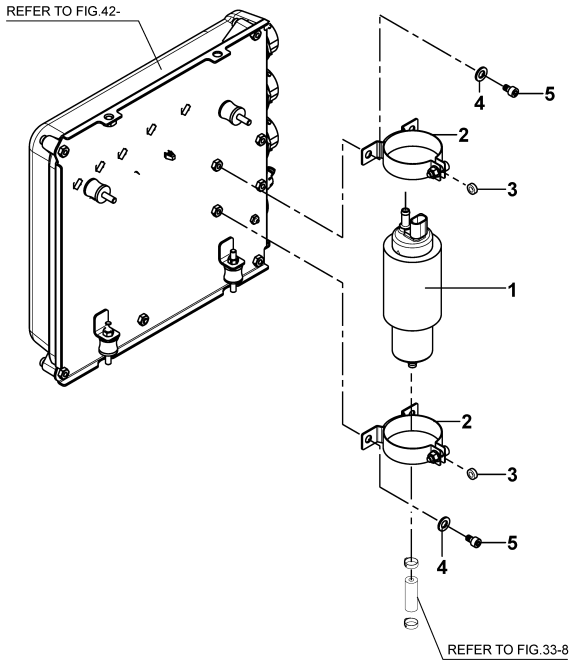

34. PUMP, FUEL LOW

(A)=6BY2-220
(B)=6BY2-260
(C)=6BY2-220Z
(D)=6BY2-260Z
(E)=
(F)=

REF.	LEV.	PARTS NO.	DESCRIPTION	Q'TY (A)	(B)	(C)	(D)	(E)	(F)	I	R
1	1	120650-51500	PUMP ASSY, FUEL LOW	1	1	1	1				
2	1	120650-51630	CLAMP BRACKET 61	2	2	2	2				
3	1	120650-55540	SPACER, FUEL PUMP CL	2	2	2	2				
4	1	120640-02220	WASHER, 6	4	4	4	4				
5	1	120640-01450	CAP BOLT, 6X10	4	4	4	4				

N:Old $\overset{\text{Yes}}{\underset{\text{No}}{\leftrightarrow}}$ New, Q:Old $\overset{\text{No}}{\underset{\text{Yes}}{\leftrightarrow}}$ New, R:Old $\overset{\text{Yes}}{\underset{\text{Yes}}{\leftrightarrow}}$ New, S:Old $\overset{\text{No}}{\underset{\text{No}}{\leftrightarrow}}$ New, W:Add, Z:Discontinued, F:Interchangeable by set, K:Q'ty Change

(C)Copy Rights YANMAR CO.,LTD.

Fig.35. HIGH-PRESSURE PUMP/INJECTOR

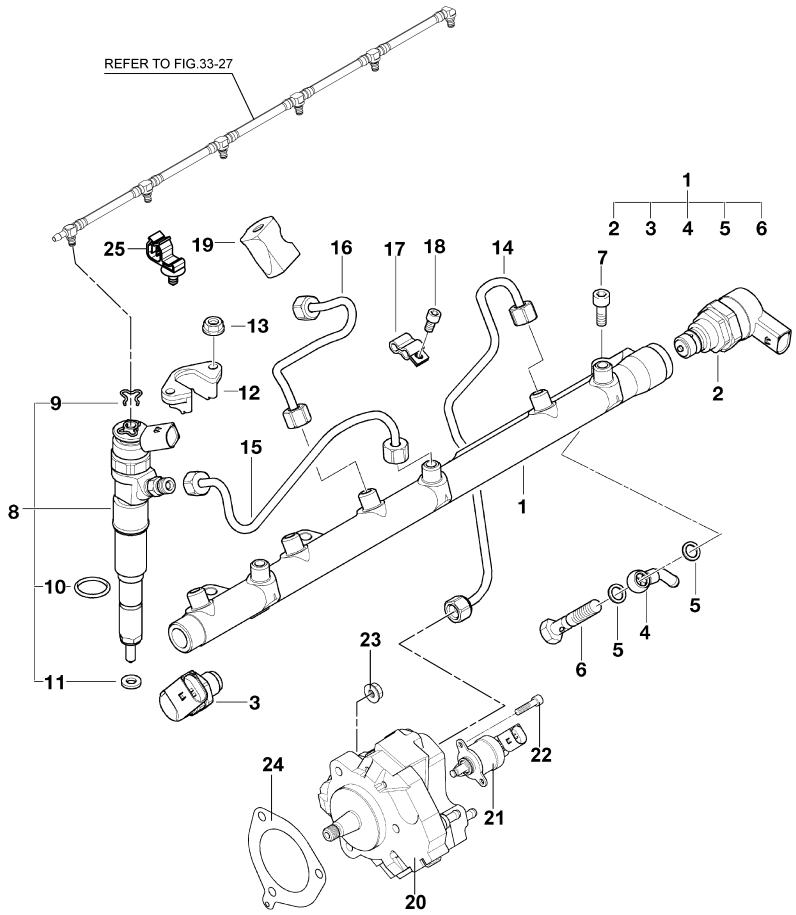

35. HIGH-PRESSURE PUMP/INJECTOR

(A)=6BY2-220
(B)=6BY2-260
(C)=6BY2-220Z
(D)=6BY2-260Z
(E)=
(F)=

REF.	LEV.	PARTS NO.	DESCRIPTION	Q'TY (A)	(B)	(C)	(D)	(E)	(F)	I	R
1	1	165001-35880	ACCUMULATOR,PRESSURE	1	1	1	1				
2	2	165001-35650	VALVE, REGULATING	1	1	1	1				
3	2	165000-70390	SENSOR, PRESSURE	1	1	1	1				
4	2	165001-35840	CONNECTOR	1	1	1	1				
5	2	165000-70160	RING, GASKET	2	2	2	2				
6	2	165000-70400	BOLT, HOLLOW	1	1	1	1				
7	1	165001-35540	SCREW, HEAD M8X25	3	3	3	3				
8	1	165000-70560	INJECTOR, RMFD	6	6	6	6				
9	2	165000-70290	CLAMP	6	6	6	6				
10	2	165000-70430	O-RING, 22 2	6	6	6	6				
11	2	165000-70270	RING, GASKET	6	6	6	6				
12	1	165000-70420	FLANGE	6	6	6	6				
13	1	165000-70640	NUT, FLANGE M6	12	12	12	12				
14	1	165001-35940	HOSE ASSY, PRESSURE	1	1	1	1				
15	1	165001-35950	HOSE ASSY, PRESSURE	3	3	3	3				
16	1	165000-93350	HOSE,PRESSURE	3	3	3	3				
17	1	165000-70410	CLAMP	3	3	3	3				
18	1	165000-70570	SCREW, HEAD M5X12	3	3	3	3				
19	1	165000-70300	MOUNTING, RUBBER	1	1	1	1				
20	1	165000-70200	PUMP, HIGH PRESSURE	1	1	1	1				
21	1	165000-70180	MEASURING, UNIT	1	1	1	1				
22	1	165000-70170	SCREW	2	2	2	2				
23	1	165000-67490	NUT, HEX AM8	3	3	3	3				
24	1	165000-70150	GASKET, STEEL	1	1	1	1				
25	1	120650-17310	CLIP,HOSE FUEL	1	1	1	1				

N:Old $\overset{\text{Yes}}{\underset{\text{No}}{\leftrightarrows}}$ New, Q:Old $\overset{\text{No}}{\underset{\text{Yes}}{\leftrightarrows}}$ New, R:Old $\overset{\text{Yes}}{\underset{\text{Yes}}{\leftrightarrows}}$ New, S:Old $\overset{\text{No}}{\underset{\text{No}}{\leftrightarrows}}$ New, W:Add, Z:Discontinued, F:Interchangeable by set, K:Q'ty Change

(C)Copy Rights YANMAR CO.,LTD.

Fig.36. FUEL FILTER

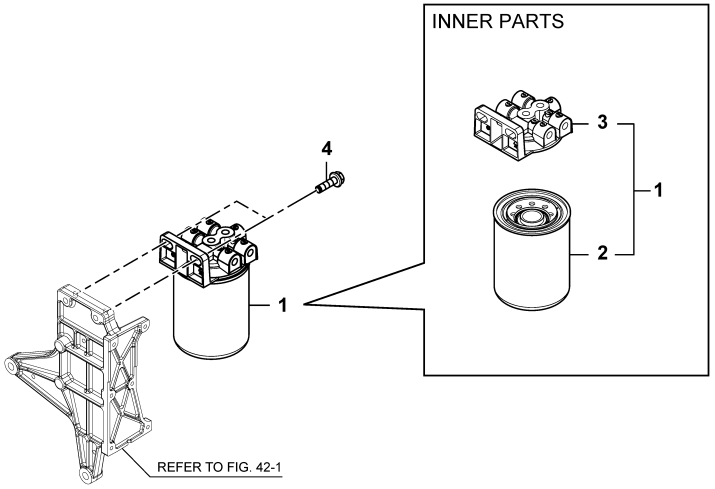

36. FUEL FILTER

(A)=6BY2-220
(B)=6BY2-260
(C)=6BY2-220Z
(D)=6BY2-260Z
(E)=
(F)=

REF.	LEV.	PARTS NO.	DESCRIPTION	Q'TY (A)	(B)	(C)	(D)	(E)	(F)	I	R
1	1	120651-55010	FILTER ASSY,FO FINE	1	1	1	1				
2	2	120651-55020	ELEMENT, FUEL FILTER	1	1	1	1				
3	2	120651-55050	HEAD, FUEL FILTER	1	1	1	1				
4	1	120640-01970	FLANGE BOLT, 10X35	2	2	2	2				

N:Old $\xleftrightarrow[\text{No}]{\text{Yes}}$ New, Q:Old $\xleftrightarrow[\text{Yes}]{\text{No}}$ New, R:Old $\xleftrightarrow[\text{Yes}]{\text{Yes}}$ New, S:Old $\xleftrightarrow[\text{No}]{\text{No}}$ New, W:Add, Z:Discontinued, F:Interchangeable by set, K:Q'ty Change

(C)Copy Rights YANMAR CO.,LTD.

Fig.37. STARTING MOTOR

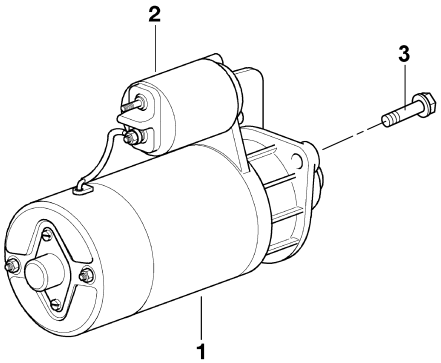

0CR10-G74800 37. STARTING MOTOR

(A)=6BY2-220
(B)=6BY2-260
(C)=6BY2-220Z
(D)=6BY2-260Z
(E)=
(F)=

REF.	LEV.	PARTS NO.	DESCRIPTION	Q'TY (A)	(B)	(C)	(D)	(E)	(F)	I	R
1	1	165001-35760	MOTOR, STARTER 2.0KW	1	1	1	1				
2	1	165001-35770	SWITCH, SOLENOID	1	1	1	1				
3	1	165000-67550	BOLT, M10X65-8.8	2	2	2	2				

N:Old $\xleftrightarrow[\text{No}]{\text{Yes}}$ New, Q:Old $\xleftrightarrow[\text{Yes}]{\text{No}}$ New, R:Old $\xleftrightarrow[\text{Yes}]{\text{Yes}}$ New, S:Old $\xleftrightarrow[\text{No}]{\text{No}}$ New, W:Add, Z:Discontinued, F:Interchangeable by set, K:Q'ty Change

(C)Copy Rights YANMAR CO.,LTD.

Fig.38. ALTERNATOR

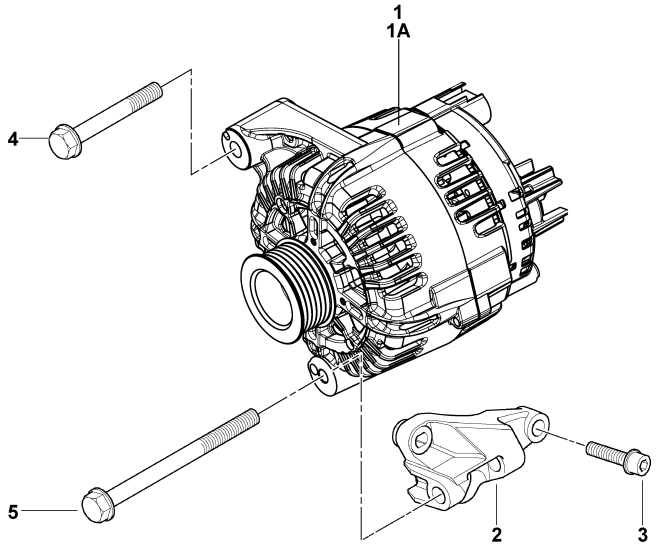

0CR10-G74800 38. ALTERNATOR

(A)=6BY2-220
(B)=6BY2-260
(C)=6BY2-220Z
(D)=6BY2-260Z
(E)=
(F)=

REF.	LEV.	PARTS NO.	DESCRIPTION	Q'TY (A)	(B)	(C)	(D)	(E)	(F)	I	R
1	1	165001-25180	ALTERNATOR	1	1	1	1			R	
1A	1	165001-25190	ALTERNATOR, RMFD	1	1	1	1			R	
2	1	165000-70070	BRACKET, SUPPORT	1	1	1	1				
3	1	165001-35670	SCREW, M8X30	3	3	3	3				
4	1	165000-67180	BOLT,HEX M10X70	1	1	1	1				
5	1	165000-67300	BOLT, HEX M10X125	1	1	1	1				

N:Old $\frac{\text{Yes}}{\text{No}}$ New, Q:Old $\frac{\text{No}}{\text{Yes}}$ New, R:Old $\frac{\text{Yes}}{\text{Yes}}$ New, S:Old $\frac{\text{No}}{\text{No}}$ New, W:Add, Z:Discontinued, F:Interchangeable by set, K:Q'ty Change

(C)Copy Rights YANMAR CO.,LTD.

Fig.39. WIRE HARNESS(ECU)

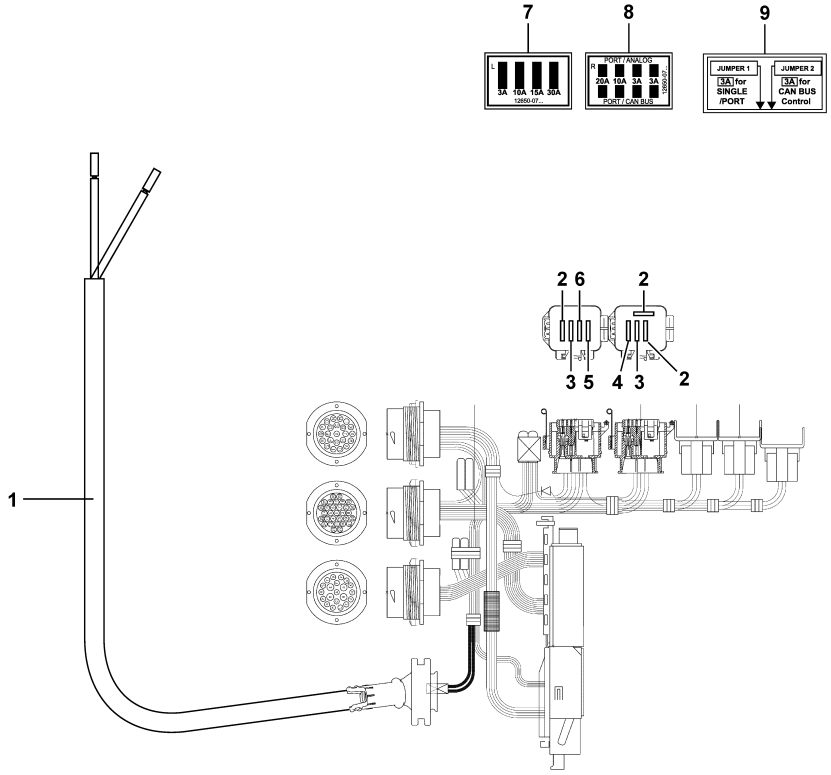

39. WIRE HARNESS(ECU)

(A)=6BY2-220
(B)=6BY2-260
(C)=6BY2-220Z
(D)=6BY2-260Z
(E)=
(F)=

REF.	LEV.	PARTS NO.	DESCRIPTION	Q'TY (A)	(B)	(C)	(D)	(E)	(F)	I	R
1	1	120650-78051	HARNESS,WIRE ECU BOX	1	1	1	1				
2	1	120650-75500	FUSE, 3A	3	3	3	3				
3	1	120650-75510	FUSE, 10A	2	2	2	2				
4	1	120650-75520	FUSE, 20A	1	1	1	1				
5	1	120650-75530	FUSE, 30A	1	1	1	1				
6	1	120650-75540	FUSE, 15A	1	1	1	1				
7	1	120650-07250	LABEL,FUSE BOX LEFT	1	1	1	1				
8	1	120650-07260	LABEL,FUSE BOX RIGHT	1	1	1	1				
9	1	120650-07270	LABEL, JUMPER	1	1	1	1				

N:Old ◄Yes/No► New, Q:Old ◄No/Yes► New, R:Old ◄Yes/Yes► New, S:Old ◄No/No► New, W:Add, Z:Discontinued, F:Interchangeable by set, K:Q'ty Change

(C)Copy Rights YANMAR CO.,LTD.

Fig.40. WIRE HARNESS

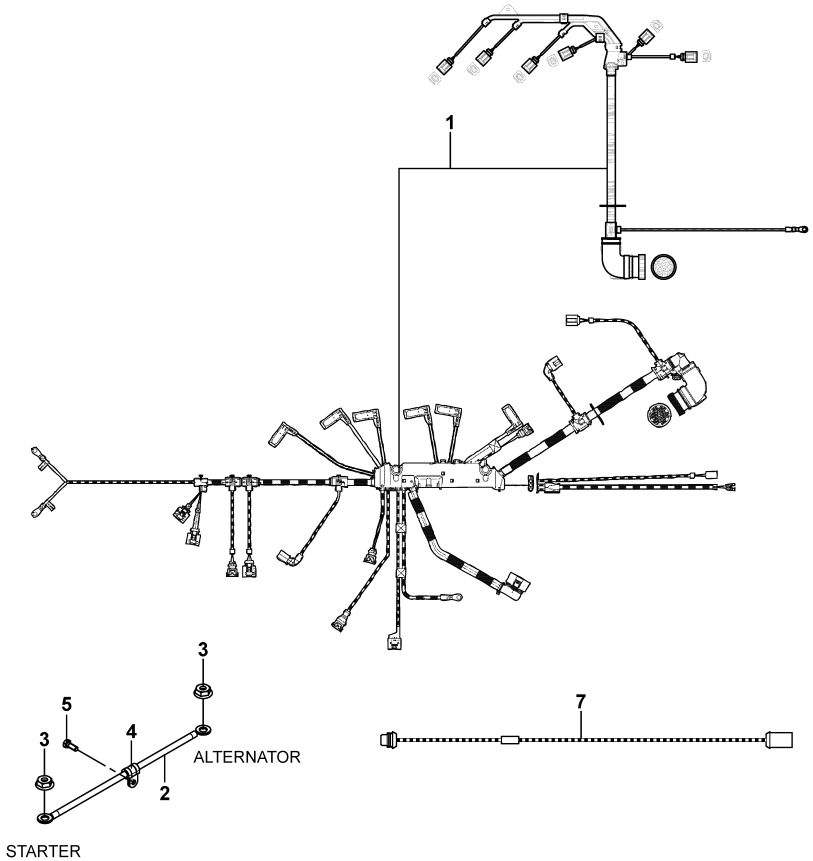

0CR10-G74800

40. WIRE HARNESS

(A)=6BY2-220
(B)=6BY2-260
(C)=6BY2-220Z
(D)=6BY2-260Z
(E)=
(F)=

	REF.	LEV.	PARTS NO.	DESCRIPTION	Q'TY (A)	(B)	(C)	(D)	(E)	(F)	I	R
	1	1	120660-78001	HARNESS, WIRE 6CYL	1	1	1	1				
	2	1	120660-78210	CABLE, CHARGE	1	1	1	1				
	3	1	120640-00330	NUT, FLANGE M8	2	2	2	2				
	4	1	120660-78600	CLAMP, PIPE	1	1	1	1				
	5	1	120640-01560	BOLT, 10X25	1	1	1	1				
I	7	1	120650-78270	HARNESS,EXT WIF	1	1	1	1				

N:Old $\xleftrightarrow[\text{No}]{\text{Yes}}$ New, Q:Old $\xleftrightarrow[\text{Yes}]{\text{No}}$ New, R:Old $\xleftrightarrow[\text{Yes}]{\text{Yes}}$ New, S:Old $\xleftrightarrow[\text{No}]{\text{No}}$ New, W:Add, Z:Discontinued, F:Interchangeable by set, K:Q'ty Change

(C)Copy Rights YANMAR CO.,LTD.

Fig.41. AIR HEATER(OPTION)

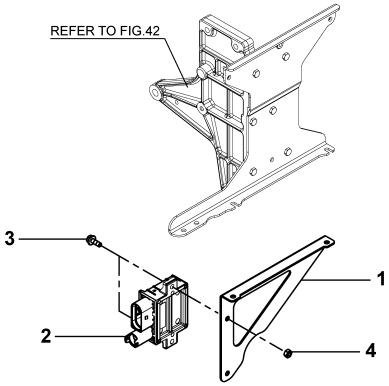

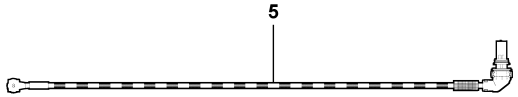

0CR10-G74800

41. AIR HEATER(OPTION)

(A)=6BY2-220
(B)=6BY2-260
(C)=6BY2-220Z
(D)=6BY2-260Z
(E)=
(F)=

REF.	LEV.	PARTS NO.	DESCRIPTION	Q'TY (A)	(B)	(C)	(D)	(E)	(F)	I	R
1	1	120651-75870	BRACKET,HEATER CONTR	1	1	1	1				
2	1	120660-78240	CONTROLLER,HEATER6BY	1	1	1	1				
3	1	120640-02080	FLANGEBOLT, 6X16	2	2	2	2				
4	1	120640-00200	NUT, M6	2	2	2	2				
5	1	120650-78260	HARNESS, HEATER POS	1	1	1	1				

N:Old $\xleftrightarrow[\text{No}]{\text{Yes}}$ New, Q:Old $\xleftrightarrow[\text{Yes}]{\text{No}}$ New, R:Old $\xleftrightarrow[\text{Yes}]{\text{Yes}}$ New, S:Old $\xleftrightarrow[\text{No}]{\text{No}}$ New, W:Add, Z:Discontinued, F:Interchangeable by set, K:Q'ty Change

(C)Copy Rights YANMAR CO.,LTD.

Fig.42. ECU

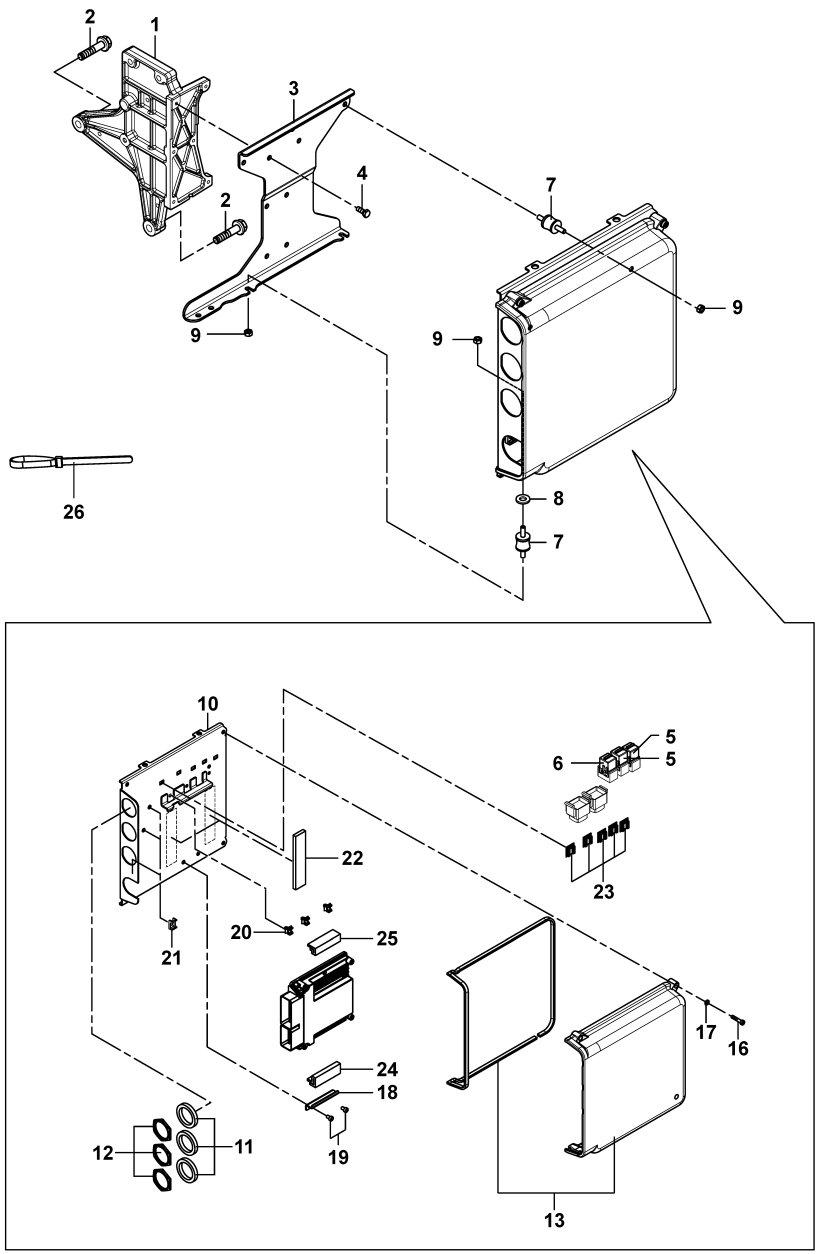

42. ECU

(A)=6BY2-220
(B)=6BY2-260
(C)=6BY2-220Z
(D)=6BY2-260Z
(E)=
(F)=

REF.	LEV.	PARTS NO.	DESCRIPTION	Q'TY (A)	(B)	(C)	(D)	(E)	(F)	I	R
1	1	120651-75410	SUPPORT, ECU BOX	1	1	1	1				
2	1	120640-01980	FLANGE BOLT, 10X45	2	2	2	2				
3	1	120651-75290	BRACKET, ECU BOX	1	1	1	1				
4	1	120640-02080	FLANGEBOLT, 6X16	6	6	6	6				
7	1	120650-75450	INSULATOR, ECU BOX	4	4	4	4				
8	1	120640-02220	WASHER, 6	2	2	2	2				
9	1	120640-00200	NUT, M6	8	8	8	8				
10	1	120650-75250	BASE PLATE, ECU	1	1	1	1				
11	1	120650-75380	GASKET, CONNECTOR	3	3	3	3				
12	1	120650-75360	NUT, CONNECTOR	3	3	3	3				
13	1	120650-75700	COVER ASSY, ECU BOX	1	1	1	1				
16	1	120640-01490	CAP BOLT, 6X30	4	4	4	4				
17	1	120640-02220	WASHER, 6	4	4	4	4				
18	1	120650-75350	RETAINER, ECU	1	1	1	1				
19	1	120640-01450	CAP BOLT, 6X10	2	2	2	2				
20	1	120650-75810	CLIP, WIRE	3	3	3	3				
21	1	120650-75820	RETAINER, WIRE	3	3	3	3				
22	1	120651-75830	RUBBER SHEET, ECU	2	2	2	2				
23	1	120650-75320	CLIP, FUSE BOX	5	5	5	5				
24	1	120650-75930	ISOLATOR, ECU LOWER	1	1	1	1				
25	1	120650-75940	ISOLATOR, ECU UPPER	1	1	1	1				
26	1	120640-09050	TIE STRAP	4	4	4	4				

N:Old ◄Yes/No► New, Q:Old ◄No/Yes► New, R:Old ◄Yes/Yes► New, S:Old ◄No/No► New, W:Add, Z:Discontinued, F:Interchangeable by set, K:Q'ty Change

(C)Copy Rights YANMAR CO.,LTD.

Fig.43. TOP COVER & V-BELT COVER

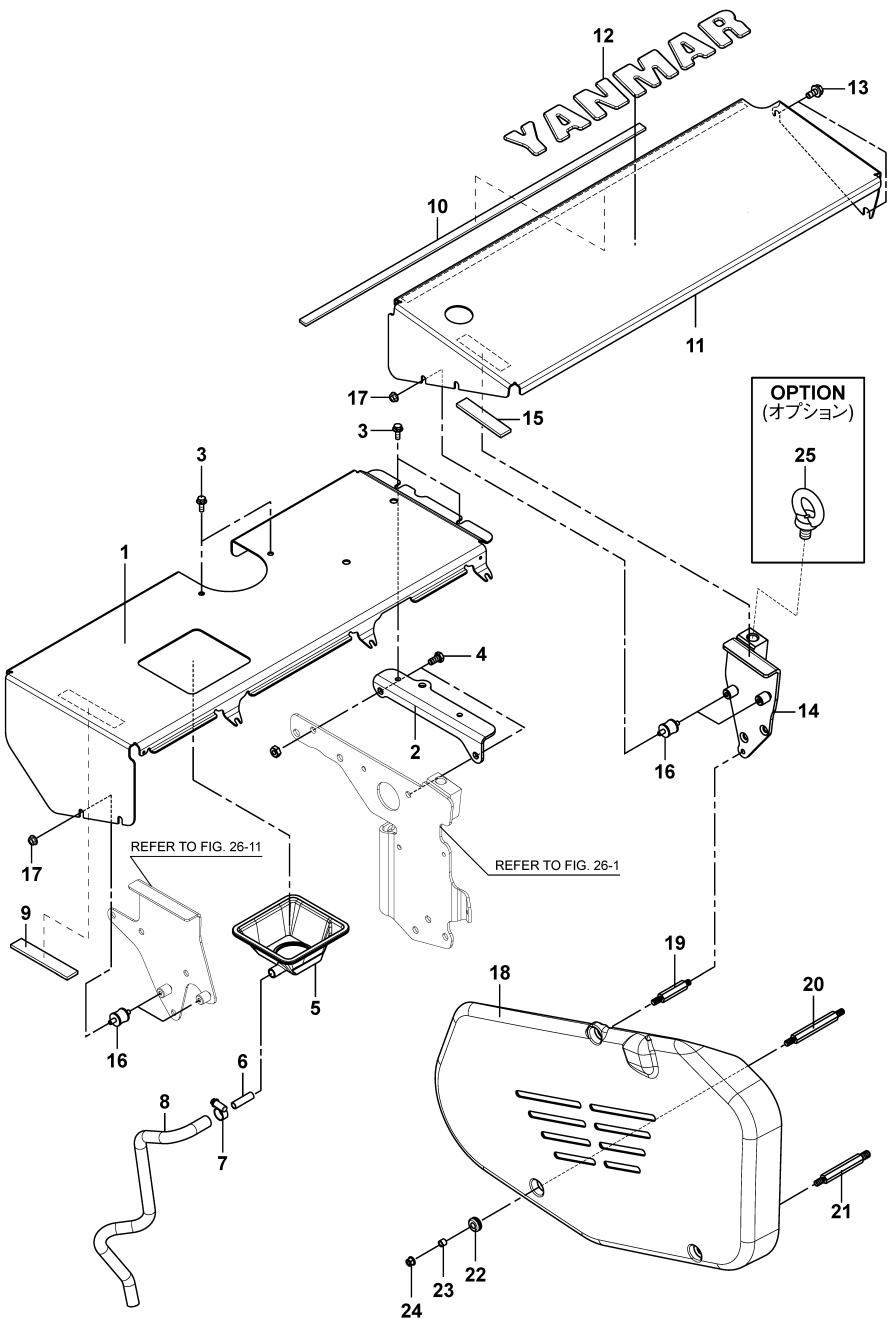

0CR10-G74800

43. TOP COVER & V-BELT COVER

(A)=6BY2-220
(B)=6BY2-260
(C)=6BY2-220Z
(D)=6BY2-260Z
(E)=
(F)=

	REF.	LEV.	PARTS NO.	DESCRIPTION	Q'TY (A)	(B)	(C)	(D)	(E)	(F)	I	R
	1	1	120661-17000	TOP COVER, A	1	1	1	1				
	2	1	120650-44270	BRACKET, TOP COVER R	1	1	1	1				
	3	1	120640-02080	FLANGE BOLT, 6X16	4	4	4	4				
	4	1	120640-01510	BOLT, 8X16	2	2	2	2				
	5	1	120661-17020	BOOT, OIL FILLER	1	1	1	1				
	6	1	120650-11660	PIPE, FILLER DRAIN	1	1	1	1				
	7	1	120640-01020	CLAMP, HOSE 16-27	1	1	1	1				
	8	1	120650-11670	HOSE, FILLER DRAIN	1	1	1	1				
	9	1	120650-17380	RUBBER SHEET A	1	1	1	1				
	10	1	120660-17360	GROMMET, TOP COVER	1	1	1	1				
	11	1	120661-17010	TOP COVER, B	1	1	1	1				
	12	1	120650-07130	LABEL, YANMAR LOGO	1	1	1	1				
	13	1	120640-01850	FLANGE BOLT, 8X16	1	1	1	1				
	14	1	120650-17320	BRACKET, TOP COVER F	1	1	1	1				
	15	1	120650-17390	RUBBER SHEET B	1	1	1	1				
	16	1	120650-17410	INSULATOR, TOP COVER	4	4	4	4				
	17	1	120640-00320	FLANGE NUT, 6	4	4	4	4				
	18	1	120650-17170	COVER, BELT	1	1	1	1				
	19	1	120650-17200	BOLT, BELT COVER 1	1	1	1	1				
	20	1	120650-17220	BOLT, BELT COVER 3	1	1	1	1				
	21	1	120650-17210	BOLT, BELT COVER 2	1	1	1	1				
	22	1	120640-00280	INSULATOR, BELT COVE	3	3	3	3				
	23	1	120640-00270	COLLAR, BELT COVER	3	3	3	3				
	24	1	120640-00330	FLANGE NUT, 8	3	3	3	3				
I	25	1	120650-07350	LIFTER	2	2	2	2				

N:Old $\frac{\text{Yes}}{\text{No}}$ New, Q:Old $\frac{\text{No}}{\text{Yes}}$ New, R:Old $\frac{\text{Yes}}{\text{Yes}}$ New, S:Old $\frac{\text{No}}{\text{No}}$ New, W:Add, Z:Discontinued, F:Interchangeable by set, K:Q'ty Change

(C)Copy Rights YANMAR CO.,LTD.

Fig.44. M.ELBOW HIGH RISER (OPTION)

ハイライザー (オプション)
HIGH RISER (OPTION)

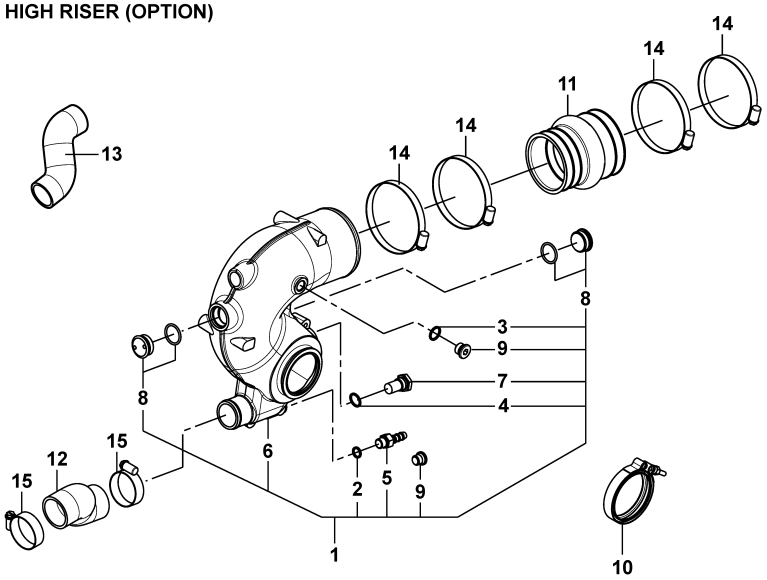

2ハイライザー (オプション)
2 HIGH RISER (OPTION)

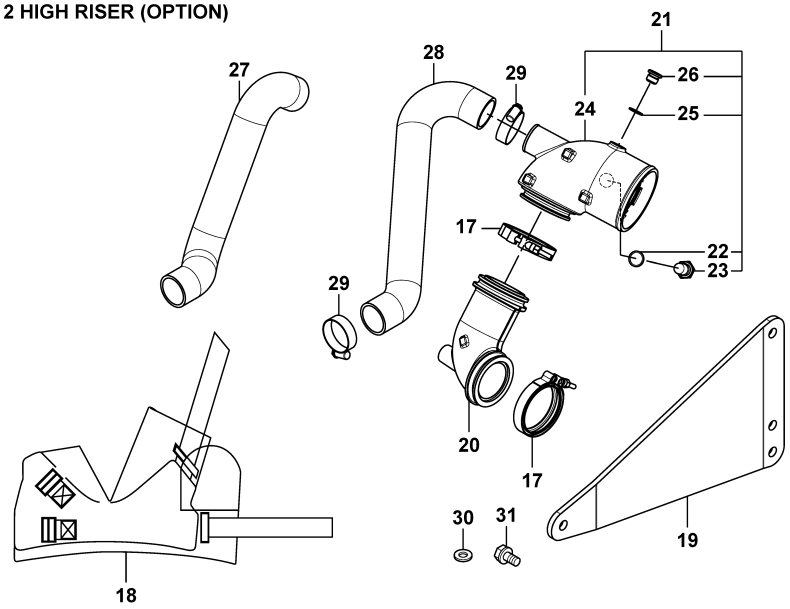

0CR10-G74800

44. M.ELBOW HIGH RISER (OPTION)

(A)=6BY2-220
(B)=6BY2-260
(C)=6BY2-220Z
(D)=6BY2-260Z
(E)=
(F)=

REF.	LEV.	PARTS NO.	DESCRIPTION	Q'TY (A)	(B)	(C)	(D)	(E)	(F)	I	R
1	1	120652-13400	ELBOW, MIXING HIGHRI	1	1	1	1				
2	2	120640-01250	RING, SEALING A14X18	1	1	1	1				
3	2	120640-01260	GASKET, 17X1.5	1	1	1	1				
4	2	120640-01270	RING, SEALING A18X22	1	1	1	1				
5	2	120650-13390	JOINT, DRAIN HIGHRIS	1	1	1	1				
6	2	120652-13410	ELBOW, MIXING HIGHRI	1	1	1	1				
7	2	120650-13420	ZINC, ANTI-CORROSIVE	1	1	1	1				
8	2	120650-13430	PLUG, MIXING ELBOW	2	2	2	2				
9	2	120650-13490	PLUG	1	1	1	1				
10	1	120650-13450	V-CLAMP, TURBINE OUT	1	1	1	1				
11	1	120650-13520	HOSE, EXH PIPE	1	1	1	1				
12	1	120650-13750	HOSE, MIXING 10 HIGH	1	1	1	1				
13	1	120650-13760	HOSE, MIXING 40 HIGH	1	1	1	1				
14	1	119172-48010	CLIP, HOSE	4	4	4	4				
15	1	120650-49720	CLAMP, HOSE	2	2	2	2				
17	1	120650-13450	V-CLAMP, TURBINE OUT	2	2	2	2				
18	1	120651-13640	COVER, EXH MANIFOLD	1	1	1	1				
19	1	120662-13881	BRACKET A, MIXING 2P	1	1	1	1				
20	1	120650-13920	BEND, 2PIECE HIGHRIS	1	1	1	1				
21	1	120650-13930	ELBOW ASSY, MIXING L	1	1	1	1				
22	2	120640-01270	RING, SEALING A18X22	1	1	1	1				
23	2	120650-13420	ZINC, ANTI-CORROSIVE	1	1	1	1				
24	2	120650-13940	ELBOW, MIXING L TYPE	1	1	1	1				
25	2	23414-130000	GASKET, 13 X 1.0	1	1	1	1				
26	2	23893-020002	PLUG, G 1/4	1	1	1	1				
27	1	120650-13951	HOSE, MIXING 40 2PIE	1	1	1	1				
28	1	120650-13980	HOSE, MIXING PORT 2P	1	1	1	1				
29	1	120650-49720	CLAMP, HOSE	2	2	2	2				
30	1	22137-100000	WASHER, 10	1	1	1	1				
31	1	26106-080202	BOLT, 8 X 20	3	3	3	3				

N:Old $\frac{\text{Yes}}{\text{No}}$ New, Q:Old $\frac{\text{No}}{\text{Yes}}$ New, R:Old $\frac{\text{Yes}}{\text{Yes}}$ New, S:Old $\frac{\text{No}}{\text{No}}$ New, W:Add, Z:Discontinued, F:Interchangeable by set, K:Q'ty Change

(C)Copy Rights YANMAR CO.,LTD.

Fig.45. FUEL FILTER (OPTION)

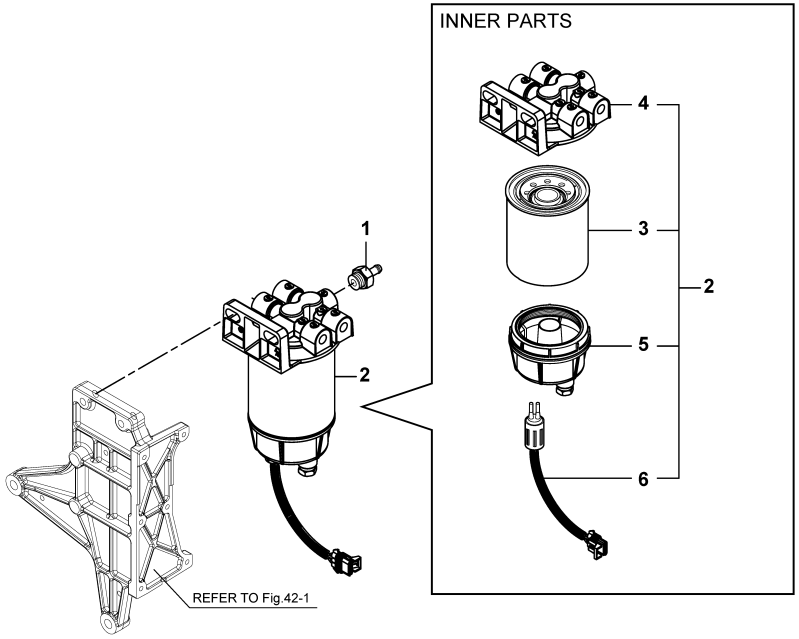

45. FUEL FILTER (OPTION)

(A)=6BY2-220
(B)=6BY2-260
(C)=6BY2-220Z
(D)=6BY2-260Z
(E)=
(F)=

	REF.	LEV.	PARTS NO.	DESCRIPTION	Q'TY (A)	(B)	(C)	(D)	(E)	(F)	I	R
I	1	1	120651-55440	JOINT, FO FILTER IN	1	1	1	1				
I	2	1	120650-55010	FILTER ASSY, FUEL	1	1	1	1				
I	3	2	120650-55020	ELEMENT, FUEL FILTER	1	1	1	1				
I	4	2	120650-55050	HEAD, FO FILTER	1	1	1	1				
I	5	2	120650-55060	BOWL, FO FILTER	1	1	1	1				
I	6	2	120650-55070	PROBE, FO FILTER	1	1	1	1				

N:Old $\frac{\text{Yes}}{\text{No}}$ New, Q:Old $\frac{\text{No}}{\text{Yes}}$ New, R:Old $\frac{\text{Yes}}{\text{Yes}}$ New, S:Old $\frac{\text{No}}{\text{No}}$ New, W:Add, Z:Discontinued, F:Interchangeable by set, K:Q'ty Change

(C)Copy Rights YANMAR CO.,LTD.

Fig.46. VDO GAUGE (OPTION)

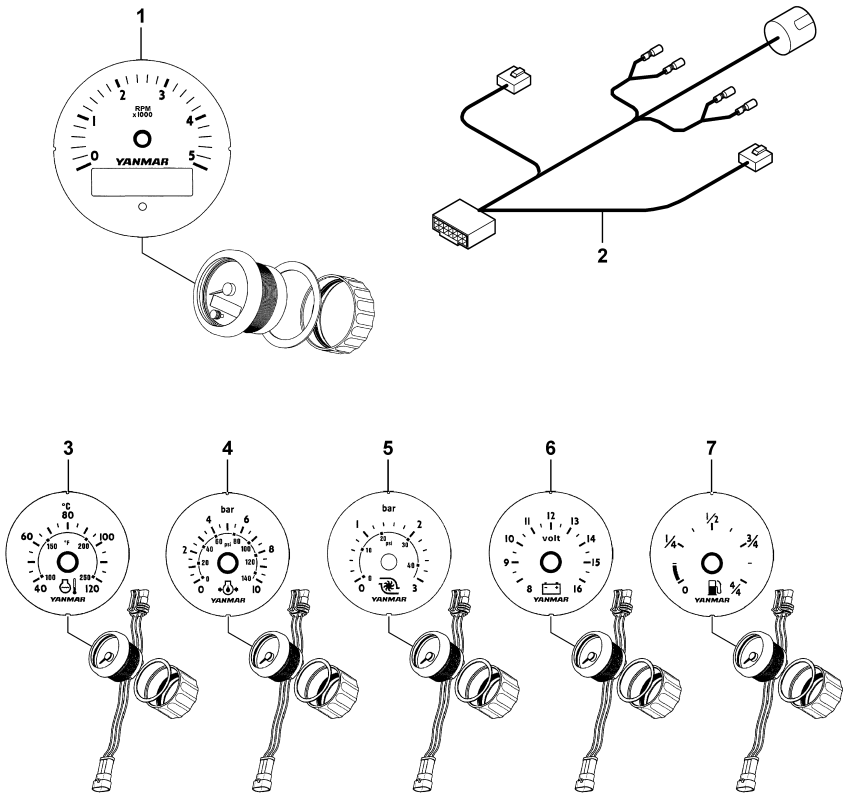

46. VDO GAUGE (OPTION)

(A)=6BY2-220
(B)=6BY2-260
(C)=6BY2-220Z
(D)=6BY2-260Z
(E)=
(F)=

	REF.	LEV.	PARTS NO.	DESCRIPTION	Q'TY (A)	(B)	(C)	(D)	(E)	(F)	I	R
I	1	1	120650-91900	TACHOMETER,(V 5000	1	1	1	1				
I	2	1	120650-91960	HARNESS,V TACHO	1	1	1	1				
I	3	1	120650-91910	GAUGE,(V WATER TEMP	1	1	1	1				
I	4	1	120650-91920	GAUGE,(V OIL PRESS	1	1	1	1				
I	5	1	120650-91930	GAUGE,(V BOOST	1	1	1	1				
I	6	1	120650-91940	GAUGE,(V VOLT 12	1	1	1	1				
I	7	1	120650-91950	GAUGE,(V FUEL	1	1	1	1				

N:Old $\xleftarrow[\text{No}]{\text{Yes}}$ New, Q:Old $\xleftarrow[\text{Yes}]{\text{No}}$ New, R:Old $\xleftarrow[\text{Yes}]{\text{Yes}}$ New, S:Old $\xleftarrow[\text{No}]{\text{No}}$ New, W:Add, Z:Discontinued, F:Interchangeable by set, K:Q'ty Change

(C)Copy Rights YANMAR CO.,LTD.

Fig.47. C.S.W.PIPE&COUPLING (ZT SPEC)

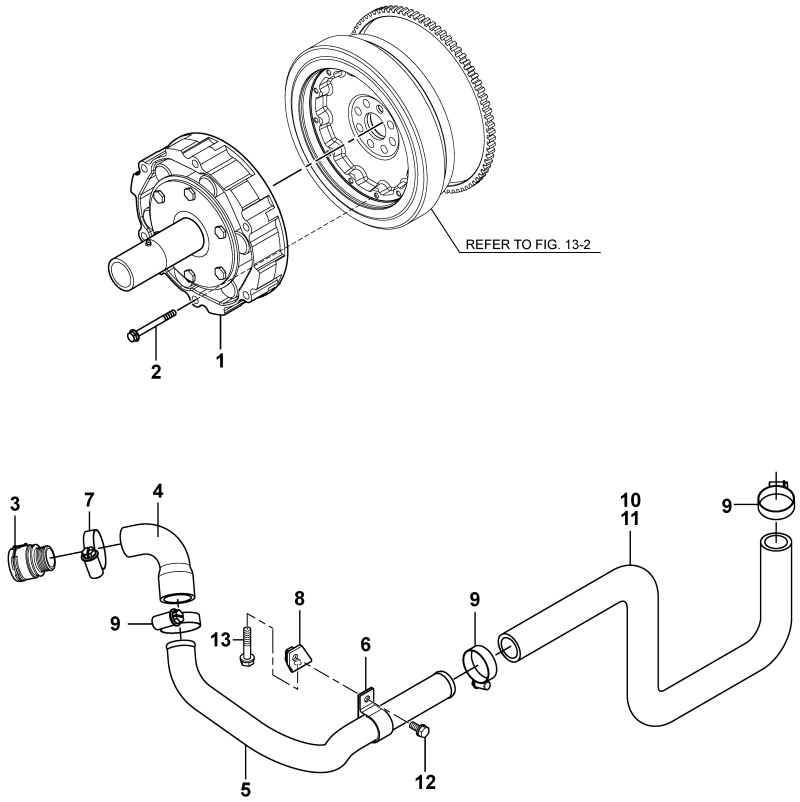

47. C.S.W.PIPE&COUPLING (ZT SPEC)

(A)=6BY2-220
(B)=6BY2-260
(C)=6BY2-220Z
(D)=6BY2-260Z
(E)=
(F)=

	REF.	LEV.	PARTS NO.	DESCRIPTION	Q'TY (A)	(B)	(C)	(D)	(E)	(F)	I	R
I	1	1	120661-81050	COUPLING CF-RSD-106			1	1				
I	2	1	26106-080602	BOLT M 8X 60 PLATED			6	6				
I	3	1	120650-42630	JOINT			1	1				
I	4	1	119779-49190	HOSE, DRIVE OUT			1	1				
I	5	1	119779-49200	CW-T(DRIVE-SWP			1	1				
I	6	1	119779-49210	CLAMP(CW-T			1	1				
I	7	1	120650-49710	CLAMP, HOSE			1	1				
I	8	1	120651-49710	BRACKET(CW-T			1	1				
I	9	1	120650-49720	CLAMP, HOSE			3	3				
I	10	1	119779-49900	HOSE,SEA WATER 2M			1	1				
I	11	1	119779-49910	HOSE,SEA WATER 2.5M			1	1				
I	12	1	26106-100162	BOLT M10X 16 PLATED			1	1				
I	13	1	26106-100652	BOLT M10X 65 PLATED			1	1				

N:Old $\frac{\text{Yes}}{\text{No}}$ New, Q:Old $\frac{\text{No}}{\text{Yes}}$ New, R:Old $\frac{\text{Yes}}{\text{Yes}}$ New, S:Old $\frac{\text{No}}{\text{No}}$ New, W:Add, Z:Discontinued, F:Interchangeable by set, K:Q'ty Change

(C)Copy Rights YANMAR CO.,LTD.

Fig.48. C.S.W.PIPE&EXHAUST BEND(OPTION

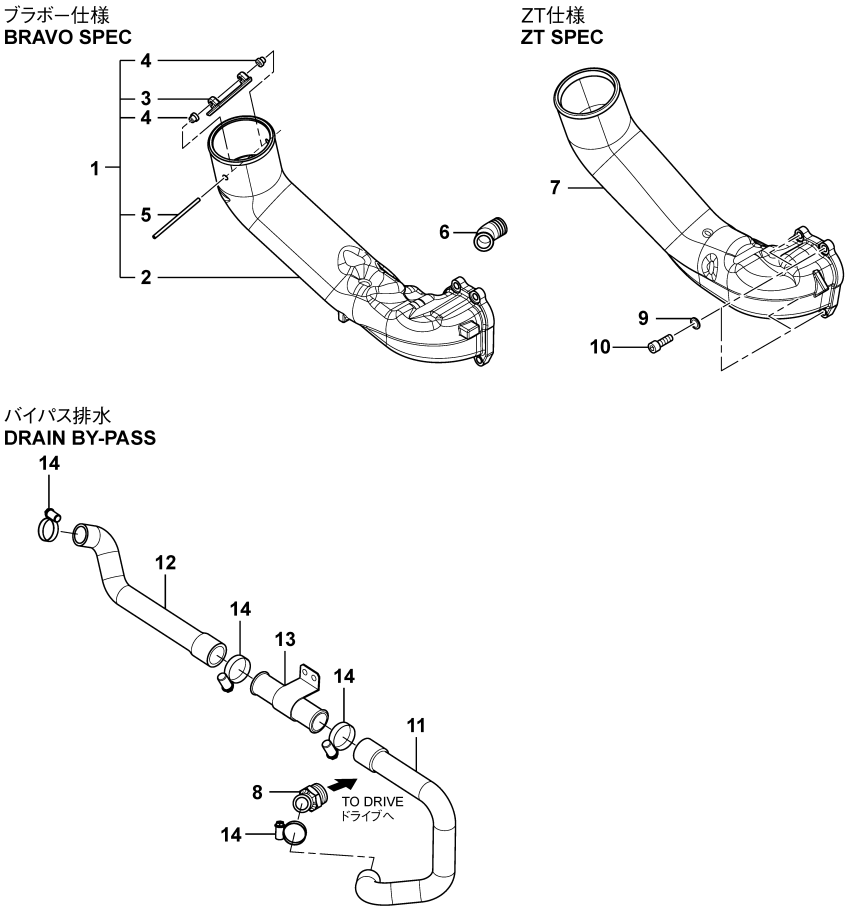

48. C.S.W.PIPE&EXHAUST BEND(OPTION

(A)=6BY2-220
(B)=6BY2-260
(C)=6BY2-220Z
(D)=6BY2-260Z
(E)=
(F)=

	REF.	LEV.	PARTS NO.	DESCRIPTION	Q'TY (A)	(B)	(C)	(D)	(E)	(F)	I	R
I	1	1	120650-13601	PIPE, EXHAUST CMP			1	1				
I	2	2	120650-13610	PIPE, EXHAUST			1	1				
I	3	2	120650-13660	FLAP,EXHAUST PIPE			1	1				
I	4	2	120650-13670	BUSH,EXHAUST PIPE			2	2				
I	5	2	120650-13680	PIN,EXHAUST PIPE			1	1				
I	6	1	119175-49550	JOINT			1	1				
I	7	1	120651-13600	PIPE, EXHAUST			1	1				
I	8	1	119779-49550	ELBOW,SEA WATER			1	1				
I	9	1	22113-100000	WASHER 10			4	4				
I	10	1	26453-100302	BOLT M10X30			4	4				
I	11	1	119779-49120	HOSE, DRIVE IN			1	1				
I	12	1	120651-49130	HOSE, BYPASS			1	1				
I	13	1	119778-49200	TUBE, DRIVE			1	1				
I	14	1	129670-49500	CLIP, HOSE			4	4				

N:Old ◄Yes/No► New, Q:Old ◄No/Yes► New, R:Old ◄Yes/Yes► New, S:Old ◄No/No► New, W:Add, Z:Discontinued, F:Interchangeable by set, K:Q'ty Change

(C)Copy Rights YANMAR CO.,LTD.

Part Number Index

All parts are stipulated in the order of part numbers.
(Depending on the area in which the part is used.)
This index will display the location of the part according to each part number.

MODEL : 6BY2
PC NO : 0CR10-G74800

PARTS No. INDEX

PARTS No.	Fig.	Ref.No.
119172-48010	29	18
	44	14
119175-49550	29	19
		24
	48	6
119775-48640	31	20
119778-08350	3	15
119778-49200	48	13
119779-49050	31	21
119779-49120	48	11
119779-49190	47	4
119779-49200	47	5
119779-49210	47	6
119779-49550	48	8
119779-49900	47	10
119779-49910	47	11
120130-39990	20	2
120640-00010	17	1
120640-00020	17	2
120640-00040	11	13
120640-00100	3	6
120640-00130	22	13
120640-00140	22	12
120640-00150	32	1
120640-00190	4	7
120640-00200	32	23
	33	24
	41	4
	42	9
120640-00220	3	10
120640-00240	13	5
120640-00270	43	23
120640-00280	43	22
120640-00290	21	2
120640-00300	32	14
120640-00320	11	38
	43	17
120640-00330	40	3
	43	24
120640-00390	29	1
120640-01020	21	8
	24	21
	32	16
	43	7
120640-01030	11	32
120640-01050	22	7
	31	14
120640-01210	21	10
	28	28
120640-01230	4	6

PARTS No.	Fig.	Ref.No.
120640-01230	33	5
120640-01240	32	11
120640-01250	44	2
120640-01260	11	17
	32	8
	44	3
120640-01270	29	11
		28
	44	4
		22
120640-01300	33	13
120640-01310	33	19
120640-01400	33	20
120640-01410	21	12
	28	22
120640-01420	32	13
120640-01430	21	3
	33	7
120640-01450	34	5
	42	19
120640-01460	3	11
	11	33
		36
	26	3
120640-01470	33	4
120640-01490	42	16
120640-01500	11	25
120640-01510	21	15
	28	19
	43	4
120640-01520	26	14
	31	15
	32	19
120640-01540	13	12
	22	3
		10
120640-01550	25	17
120640-01560	13	9
	40	5
120640-01570	32	5
120640-01580	21	6
120640-01590	11	24
	22	8
120640-01830	32	22
	33	23
120640-01850	43	13
120640-01860	23	20
120640-01870	23	16
	32	3
120640-01880	5	5

PARTS No.	Fig.	Ref.No.
120640-01880	13	7
120640-01900	3	14
120640-01910	3	13
	26	8
120640-01920	5	4
	23	22
120640-01930	32	2
120640-01940	3	2
	26	10
120640-01960	26	5
120640-01970	5	2
	36	4
120640-01980	42	2
120640-01990	23	17
120640-02000	5	6
120640-02010	3	3
120640-02040	3	5
120640-02050	3	4
120640-02080	4	11
	11	37
	28	3
	33	12
	41	3
	42	4
	43	3
120640-02130	3	18
	11	29
120640-02140	26	7
		15
120640-02150	23	19
120640-02160	23	21
120640-02210	13	10
120640-02220	11	23
	22	9
	32	4
		21
	33	22
	34	4
	42	8
		17
120640-02230	21	14
	22	4
		11
	28	20
	32	18
120640-09050	42	26
120640-09130	24	22
	29	2
120650-01760	3	16
120650-07030	6	1

PARTS No.	Fig.	Ref.No.
120650-07040	6	2
120650-07050	6	3
120650-07060	6	4
120650-07070	6	5
120650-07080	6	6
120650-07090	6	7
120650-07100	6	8
120650-07111	6	14
120650-07130	43	12
120650-07150	6	10
120650-07161	6	11
120650-07171	6	12
120650-07191	6	13
120650-07250	39	7
120650-07260	39	8
120650-07270	39	9
120650-07350	43	25
120650-08401	5	7
120650-11440	26	2
120650-11650	28	31
120650-11660	43	6
120650-11670	43	8
120650-13070	11	2
		16
120650-13090	11	19
120650-13130	11	14
120650-13140	11	15
120650-13150	11	12
120650-13330	11	18
120650-13390	44	5
120650-13420	29	12
		29
	44	7
		23
120650-13430	29	13
	44	8
120650-13450	29	3
		25
	44	10
		17
120650-13490	44	9
120650-13520	29	5
	44	11
120650-13601	48	1
120650-13610	48	2
120650-13660	48	3
120650-13670	48	4
120650-13680	48	5
120650-13750	44	12
120650-13760	44	13

MODEL : 6BY2
PC NO : 0CR10-G74800

PARTS No. INDEX

PARTS No.	Fig.	Ref.No.
120650-13870	29	26
120650-13901	29	10
120650-13911	29	15
120650-13920	44	20
120650-13930	29	27
	44	21
120650-13940	29	30
	44	24
120650-13951	44	27
120650-13980	44	28
120650-17170	43	18
120650-17200	43	19
120650-17210	43	21
120650-17220	43	20
120650-17310	35	25
120650-17320	43	14
120650-17370	26	13
120650-17380	43	9
120650-17390	43	15
120650-17410	43	16
120650-18430	23	4
120650-18440	23	5
120650-18450	23	6
120650-18470	23	7
120650-18480	23	8
	27	8
120650-18490	23	9
	27	10
120650-18500	23	12
	27	11
120650-18510	23	13
120650-18520	23	14
120650-18530	23	10
120650-18540	23	11
120650-18830	22	6
120650-18850	22	1
120650-18910	22	5
120650-21500	13	8
120650-33300	31	12
120650-34850	4	22
120650-34890	4	12
120650-34910	4	26
120650-39190	33	11
120650-39250	21	7
120650-39270	21	16
120650-39290	21	11
120650-39350	21	9
120650-42300	25	1
120650-42310	25	3
120650-42360	25	18

PARTS No.	Fig.	Ref.No.
120650-42620	31	16
120650-42630	47	3
120650-42650	31	23
120650-44030	27	3
120650-44040	27	4
120650-44050	27	7
120650-44070	27	6
120650-44090	27	9
120650-44150	26	1
120650-44180	26	6
120650-44220	26	4
120650-44230	26	12
120650-44270	43	2
120650-44540	11	27
120650-44560	11	21
120650-44570	11	22
120650-44580	11	26
120650-44590	11	28
120650-49200	28	4
120650-49260	28	2
120650-49310	24	24
		29
120650-49350	28	23
120650-49380	24	16
120650-49390	24	12
120650-49400	24	17
120650-49430	28	25
120650-49460	28	27
120650-49520	31	3
120650-49550	31	4
120650-49580	31	8
120650-49590	31	9
120650-49610	11	20
	27	12
	31	2
120650-49650	28	9
120650-49710	28	8
		14
		16
		18
	31	5
		6
		11
		22
	47	7
120650-49720	11	6
	29	20
		33
	31	7
		24

PARTS No.	Fig.	Ref.No.
120650-49720	44	15
		29
	47	9
120650-49750	29	21
120650-49810	24	25
120650-49830	24	26
		31
120650-49850	24	23
120650-51500	34	1
120650-51620	4	5
120650-51630	34	2
120650-55010	45	2
120650-55020	45	3
120650-55050	45	4
120650-55060	45	5
120650-55070	45	6
120650-55220	33	1
120650-55320	33	8
		26
120650-55540	34	3
120650-55660	33	18
120650-55710	33	15
120650-55720	33	3
120650-55730	33	2
120650-55830	33	29
120650-55840	33	9
		25
120650-55850	28	29
	33	31
120650-57010	31	13
120650-57410	32	12
120650-57440	32	15
120650-75250	42	10
120650-75320	42	23
120650-75350	42	18
120650-75360	42	12
120650-75380	42	11
120650-75450	42	7
120650-75500	39	2
120650-75510	39	3
120650-75520	39	4
120650-75530	39	5
120650-75540	39	6
120650-75700	42	13
120650-75810	42	20
120650-75820	42	21
120650-75930	42	24
120650-75940	42	25
120650-78051	39	1
120650-78260	41	5

PARTS No.	Fig.	Ref.No.
120650-78270	40	7
120650-85370	32	9
120650-85390	32	17
120650-85410	21	13
	32	24
120650-85430	32	20
	33	21
120650-91900	46	1
120650-91910	46	3
120650-91920	46	4
120650-91930	46	5
120650-91940	46	6
120650-91950	46	7
120650-91960	46	2
120651-07120	6	9
120651-13600	48	7
120651-13640	44	18
120651-44190	26	11
120651-44350	28	15
120651-44500	27	13
120651-44510	27	14
120651-44520	27	15
120651-49130	48	12
120651-49420	28	21
120651-49710	47	8
120651-55010	36	1
120651-55020	36	2
120651-55050	36	3
120651-55310	33	6
120651-55340	33	10
120651-55440	45	1
120651-75290	42	3
120651-75410	42	1
120651-75830	42	22
120651-75870	41	1
120652-13400	44	1
120652-13410	44	6
120652-21603	13	11
120653-01710	3	17
120660-01800	3	1
120660-01900	3	7
120660-08100	5	1
120660-08110	5	3
120660-11410	11	30
120660-11430	11	31
120660-11460	11	34
120660-12510	11	7
120660-13040	11	11
120660-13160	11	10
120660-13470	29	14

MODEL : 6BY2
PC NO : 0CR10-G74800

PARTS No. INDEX

PARTS No.	Fig.	Ref.No.
120660-13510	29	4
120660-13810	29	6
120660-13820	29	7
120660-13881	29	8
120660-13890	29	9
120660-13891	29	9 -1
120660-17290	10	10
120660-17360	43	10
120660-18050	11	4
120660-18140	11	8
120660-18200	11	3
120660-18210	11	9
120660-18420	23	3
120660-18460	23	15
120660-18820	22	2
120660-18900	11	5
120660-21420	13	4
120660-32600	18	8
120660-34700	4	20
120660-34800	4	13
120660-34810	4	21
120660-34840	4	10
120660-39310	21	5
120660-44020	27	5
120660-44030	27	16
120660-44040	27	17
120660-44050	27	18
120660-44210	26	9
120660-44400	23	18
120660-49440	28	30
120660-49450	28	26
120660-49540	31	1
120660-49820	24	30
120660-49860	24	28
120660-55290	33	17
120660-55300	33	14
120660-55630	33	30
120660-55810	33	27
120660-55820	33	28
120660-78001	40	1
120660-78210	40	2
120660-78240	41	2
120660-78600	40	4
120660-85320	32	6
120660-85330	32	10
120660-85360	32	7
120661-01710	3	12
120661-17000	43	1
120661-17010	43	11
120661-17020	43	5

PARTS No.	Fig.	Ref.No.
120661-18010	11	1
120661-18300	11	35
120661-18400	23	1
120661-18410	23	2
120661-21400	13	2
120661-21410	13	3
120661-21470	13	6
120661-39200	21	4
120661-39350	21	1
120661-44000	27	1
120661-44010	27	2
120661-44530	28	17
120661-49100	28	10
120661-49250	28	1
120661-49330	28	24
120661-49560	31	10
120661-55330	33	16
120661-81050	47	1
120662-13881	44	19
124413-39100	20	1
127675-46012	30	1
128397-44500	26	16
128397-44510	26	17
129270-44501	26	20
129670-44570	26	18
129670-49500	48	14
165000-63610	24	1
165000-66930	13	14
	24	11
165000-66950	19	8
165000-67110	15	8
	16	11
165000-67120	13	15
165000-67180	38	4
165000-67230	2	11
165000-67240	24	8
165000-67280	18	2
165000-67290	1	8
165000-67300	38	5
165000-67330	2	13
165000-67360	9	5
	13	19
165000-67400	1	7
165000-67410	1	14
165000-67420	7	5
165000-67430	15	3
165000-67470	1	9
165000-67490	35	23
165000-67550	37	3
165000-67720	1	11

PARTS No.	Fig.	Ref.No.
165000-67730	1	3
	15	5
165000-67740	1	12
165000-67750	1	6
165000-67760	1	4
	16	7
165000-67770	1	1
165000-67780	1	5
165000-67790	1	2
165000-67810	18	1
165000-67870	7	6
165000-67880	1	10
165000-67910	7	7
165000-67920	7	2
165000-67960	24	10
165000-67990	8	4
165000-68000	8	5
165000-68010	9	6
165000-68050	8	1 A
165000-68060	8	1 B
165000-68070	8	1 C
165000-68120	9	16
165000-68150	9	1
165000-68160	9	10
165000-68170	9	11
165000-68180	9	9
165000-68230	9	8
165000-68240	9	2
165000-68280	8	2
165000-68310	4	1
165000-68320	18	10
165000-68390	2	2
165000-68400	2	3
165000-68410	2	5
165000-68420	2	4
165000-68430	2	1
165000-68440	13	13
165000-68450	2	6
165000-68460	12	5 AY
165000-68470	12	5 AG
165000-68480	12	5 AW
165000-68490	12	5 BY
165000-68500	12	5 BG
165000-68510	12	5 BW
165000-68520	12	5 CY
165000-68530	12	5 CG
165000-68540	12	5 CW
165000-68550	12	4 AY
165000-68560	12	4 AG
165000-68570	12	4 AW

PARTS No.	Fig.	Ref.No.
165000-68580	12	4 BY
165000-68590	12	4 BG
165000-68600	12	4 BW
165000-68610	12	4 CY
165000-68620	12	4 CG
165000-68630	12	4 CW
165000-68640	12	2 AY
165000-68650	12	2 AG
165000-68660	12	2 AW
165000-68670	12	2 BY
165000-68680	12	2 BG
165000-68690	12	2 BW
165000-68700	12	2 CY
165000-68710	12	2 CG
165000-68720	12	2 CW
165000-68730	12	3 AY
165000-68740	12	3 AG
165000-68750	12	3 AW
165000-68760	12	3 BY
165000-68770	12	3 BG
165000-68780	12	3 BW
165000-68790	12	3 CY
165000-68800	12	3 CG
165000-68810	12	3 CW
165000-68850	12	1
165000-68870	15	10
165000-68900	15	9
165000-68930	14	2
165000-68940	14	3 B
165000-68950	14	3 A
165000-68960	14	3 D
165000-68970	14	3 C
165000-68980	14	3 F
165000-68990	14	3 E
165000-69000	14	4 A
165000-69010	14	4 B
165000-69020	14	4 C
165000-69030	14	4 D
165000-69040	14	4 E
165000-69050	14	4 F
165000-69060	14	1
165000-69070	14	6
165000-69080	14	7
165000-69090	14	7 A
165000-69100	14	5
165000-69120	2	10
165000-69130	2	8
165000-69190	16	8
165000-69200	16	6
165000-69210	16	1

MODEL : 6BY2
PC NO : 0CR10-G74800

PARTS No. INDEX

PARTS No.	Fig.	Ref.No.
165000-69240	16	4
165000-69250	16	12
165000-69260	16	13
165000-69270	16	5
165000-69280	7	10
165000-69290	7	9
165000-69300	7	15
165000-69310	7	14
165000-69320	7	11
165000-69330	7	13
165000-69350	7	12
165000-69360	24	15
165000-69370	18	4
165000-69390	18	5
165000-69400	18	7
165000-69410	18	3
165000-69430	18	9
165000-69480	1	13
165000-69550	19	1
165000-69560	19	7
165000-69570	19	4
165000-69580	19	5
165000-69590	19	2
165000-69600	19	9
165000-69610	19	10
165000-69620	19	11
165000-69630	19	3
165000-69650	24	5
165000-69660	24	6
165000-69670	24	7
165000-69690	2	7
	24	3
165000-69720	24	2
165000-69780	24	14
165000-69800	10	4
165000-69810	10	3
165000-69820	10	6
165000-69830	10	5
165000-69840	10	7
165000-69850	10	9
165000-69860	10	2
165000-69870	10	1
165000-69910	9	12
165000-70000	8	7
165000-70070	38	2
165000-70150	35	24
165000-70160	35	5
165000-70170	35	22
165000-70180	35	21
165000-70200	35	20

PARTS No.	Fig.	Ref.No.
165000-70210	16	3
165000-70220	15	6
165000-70230	15	4
165000-70240	16	2
165000-70250	15	7
	16	10
165000-70260	15	1
165000-70270	35	11
165000-70290	35	9
165000-70300	35	19
165000-70390	35	3
165000-70400	35	6
165000-70410	35	17
165000-70420	35	12
165000-70430	35	10
165000-70560	35	8
165000-70570	35	18
165000-70640	35	13
165000-70660	8	6
165000-70680	13	17
165000-70690	13	18
165000-70700	9	14
165000-70730	9	15
165000-71020	9	13
165000-93230	4	18
165000-93240	4	19
165000-93260	4	2
165000-93270	4	8
165000-93310	13	16
165000-93350	35	16
165001-22380	24	1 A
165001-25170	4	17
165001-25180	38	1
165001-25190	38	1 A
165001-35540	35	7
165001-35650	35	2
165001-35670	38	3
165001-35680	8	3
165001-35710	24	4
165001-35730	24	13
165001-35740	19	6
165001-35760	37	1
165001-35770	37	2
165001-35780	9	3
165001-35790	10	8
165001-35800	24	9
165001-35810	4	15
165001-35820	4	16
165001-35830	16	9
165001-35840	35	4

PARTS No.	Fig.	Ref.No.
165001-35850	2	9
165001-35880	35	1
165001-35920	7	1
165001-35940	35	14
165001-35950	35	15
165001-35970	7	8
165001-35980	4	14
165001-35990	15	2
165001-39220	9	4
165001-39240	7	4

PARTS No.	Fig.	Ref.No.

YANMAR

YANMAR CO.,LTD.