YANMAR

PARTS CATALOG

0CR10-G85600

Last update Mar., 2013

Introduction

1. This parts catalog is a first edition of the 6BY3-220, 6BY3-220Z, 6BY3-260, 6BY3-260Z Diesel engine.

	Parts catalog No.	Date of issue	Remarks
First edition	0CR10-G85600	June, 2012	

2. This parts catalog does not contain the technical data needed for maintenance service.

3. The illustrations used in this parts catalog have been simplified for clarity.

4. The contents of this parts catalog are subject to change without notice.

5. Be sure to use only Yanmar genuine parts for repairs. If imitation parts are used, it may cause engine defects.

Directions for the Parts Catalog.

1.This Parts Catalog shows both standard and optional parts.
2.Parts may change without prior notice.
3.The following is an example of the Parts Catalog format.

0CF10-G21601 29. FUEL INJECTION PUMP(W/BOOST)

(A)=4JH-DT
(B)=4JH-DTZ
(C)=4JH-DTZP
(D)=4JH-DTZA
(E)=4JH-DTZY
(F)=

① REF.	② LEV.	PARTS NO.	DESCRIPTION	Q'TY (A)	(B)	(C)	(D)	(E)	(F)	③ I	⑤ R
1	1	729595-51390	FUEL INJECTION PUMP	1	1	1	1	1			1
1-1	1	729595-51391	FUEL INJECTION PUMP	1	1	1	1	1		N	1
	(A=E00185)	(B=E00200)									
3	2	26022-060162	SCREW M 6X 16	9	9	9	9	9			
3-1 ④	2	26022-060162	SCREW M 6X 16	4	4	4	4	4		K	
	(A=E00156)	(B=E00156)	(C=E00156) (D=E00156)	(E=E00156)							
4	2	129470-51040	CAMSHAFT	1	1	1	1	1			
5	2	122710-51050	BEARING, ROLLER	2	2	2	2	2			
6	2	129470-51060	RETAINER	1	1	1	1	1			

Remarks
(1) BOOST COMPEMSATOR TYPE. OPTIONAL
PART, TO E00155,(4JH-DT, 4JH-DTZ

① Ref. No.

The Ref. No. listed may not be in accordance with the illustration Ref. No.

(Ex.) Illustration No. 1 — List Ref No. 1 (Before change) → 1- 1 (After change)

For interchangeable symbols N, R and K, illustrations for new parts may be abbreviated.

② Lev. (Level)

Level indication
The numbers below indicate the level of relativity towards the main part.
1 ----- Main parts (Assembly parts)
2 ----- Sub component included in " 1 ".
3 ----- Sub component included in " 2 ".
Note) Parts that are not for sale are partially illustrated but not listed.

③ Interchangeability Symbol

When a part change takes place, one of the following interchangeability symbols is indicated beside the part.

Symbol	Interchangeability	Contents note
N	Old ← Yes / No → New	New Part is interchangeable for Old Part but Old Part is not interchangeable for New Part.
Q	Old ← No / Yes → New	New Part is not interchangeable for Old Part but Old Part is interchangeable for New Part.
R	Old ← Yes / Yes → New	New/ Old Parts are both interchangeable.
S	Old ← No / No → New	New/ Old Parts are both not interchangeable.
W		Part newly added.
Z		Part discontinued.
F		Not interchangeable by a single part but interchangeable together with related parts.
K		Changes only for used parts quantities.

④ Effective Machine No.

When a part changes, the effective Machine No. will be indicated in the (A)-(F) column.

Product Symbol	Product No.	Product Symbol	Product No.
C	Clutch No. Compressor No.	F	Machine No. (Agricultural Equip.)
D	Drive No.	M	Machine No.
E	Engine No.		

Note 1) A date may follow the symbol. (Ex.) 1996.01
Note 2) " XXXXX " and " ZZZZZ " are for parts that could not be predicted or for engine models that could not be identified.
Note 3) (A=E00185) is the E (Engine Serial Number) for the column (A) model (in this case 4JH-DT) after the parts design change.

⑤ Remarks

Figures or alphabets (symbols) are entered in the remarks column.
The comments (remarks) on parts that are indicated at the bottom of the illustration are the same symbols as those stated above.

CONTENTS

MODEL : 6BY3-220(Z)/260(Z)
PC NO : 0CR10-G85600

Fig.No. GROUP NAME

6BY3-220(Z)/260(Z)

1. CYLINDER BLOCK
2. LOWER TIMING CASE
3. FLYWHEEL HOUSING
4. OIL PAN/LUB. OIL SUMP
5. ENGINE BRACKET
6. LABEL
7. CYL.HEAD/VALVE TRAIN-CAMSHAFT
8. CYL.HEAD ATTACHED/GLOW PLUG
9. CYLINDER HEAD COVER
10. INTAKE MANIFOLD
11. TURBOCHARGER
12. AIR FILTER
13. C.S.W.PIPE & EXHAUST BEND(OPTION)
14. CRANKSHAFT WITH BEARING SHELLS
15. FLYWHEEL & CYL.MOUNTING PARTS
16. PISTON & CONNECTING ROD
17. TIMING CHAIN LOWER P/DAMPER
18. CAMSHAFT & TIMING GEAR CHAIN
19. V-BELT
20. TOP COVER & V-BELT COVER
21. LUB.OIL PUMP
22. LUB.OIL FILTER
23. ROTARY PUMP(OPTION)
24. LUB.OIL PIPE(TURBOCHARGER)
25. AIR COOLER
26. AIR COOLER(INNER PARTS)
27. WATER PUMP
28. COOLING SEA WATER PUMP
29. HEAT EXCHANGER

Fig.No. GROUP NAME

30. HEAT EXCHANGER(INNER PARTS)
31. HOSE, FW PUMP
32. C.S.W.PIPE & COUPLING(ZT SPEC)
33. MIXING ELBOW
34. M.ELBOW HIGH RISER(OPTION)
35. M.ELBOW 2PIECE HIGH RISER(OPTION)
36. BILGE PUMP(OPTION)
37. STEERING OIL COOLER
38. STEERING PUMP/PIPE
39. FUEL OIL FILTER
40. PUMP, FUEL LOW
41. HIGH-PRESSURE PUMP/INJECTOR
42. FUEL FILTER
43. FUEL FILTER(OPTION)
44. STARTING MOTOR
45. ALTERNATOR
46. WIRE HARNESS(ECU)
47. WIRE HARNESS
48. AIR HEATER
49. ECU
50. ECU EXTENSION HARNES
51. VALVE(OIL STOP)
52. VDO GAUGE(OPTION)
53. TOOL

Fig.1. CYLINDER BLOCK

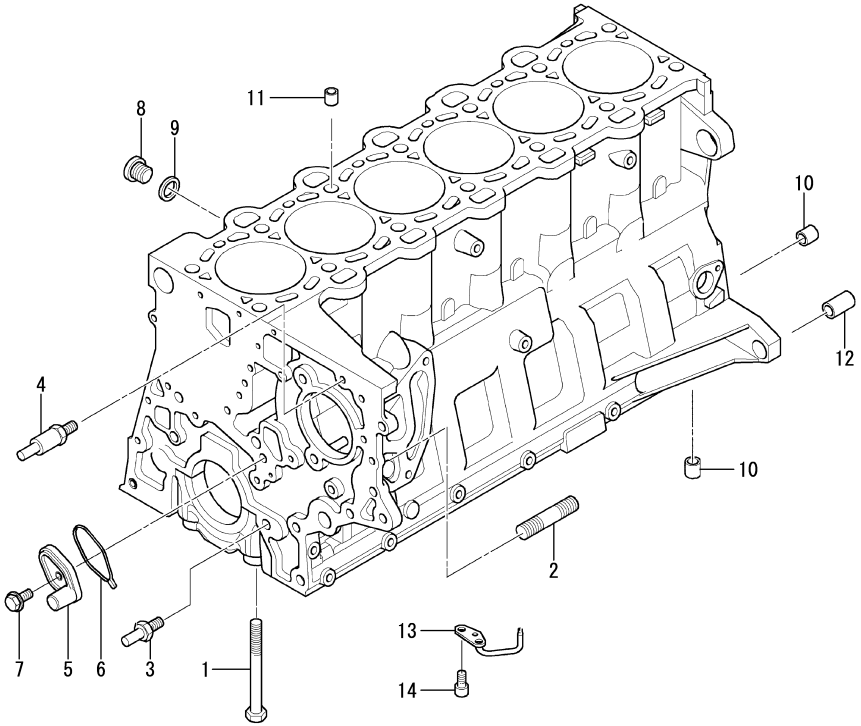

1. CYLINDER BLOCK

(A)=6BY3-220
(B)=6BY3-260
(C)=6BY3-220Z
(D)=6BY3-260Z
(E)=
(F)=

REF.	LEV.	PARTS NO.	DESCRIPTION	Q'TY (A)	(B)	(C)	(D)	(E)	(F)	I	R
1	1	165000-67770	BOLT, HEX M10X80	14	14	14	14				
2	1	165000-67790	STUD, M8X42	3	3	3	3				
3	1	165000-67730	BOLT, BEARING	3	3	3	3				
4	1	165000-67760	BOLT, BEARING	1	1	1	1				
5	1	165000-67780	NOZZLE, OIL SPRAYING	1	1	1	1				
6	1	165000-67750	GASKET, PROFILE	1	1	1	1				
7	1	165000-67400	SCREW, HEAD M6X16	1	1	1	1				
8	1	165000-67290	PLUG, SCREW M14X1.5	1	1	1	1				
9	1	165000-67470	RING, GASKET 14X20	1	1	1	1				
10	1	165000-67880	DOWEL, D=10.5MM	6	6	6	6				
11	1	165000-67720	DOWEL, D=14.5MM	2	2	2	2				
12	1	165000-67740	DOWEL, D=14.5MM	2	2	2	2				
13	1	165000-69480	NOZZLE, OIL SPRAYING	6	6	6	6				
14	1	165000-67410	SCREW, HEAD M6X10	12	12	12	12				

N:Old $\xleftrightarrow[\text{No}]{\text{Yes}}$ New, Q:Old $\xleftrightarrow[\text{Yes}]{\text{No}}$ New, R:Old $\xleftrightarrow[\text{Yes}]{\text{Yes}}$ New, S:Old $\xleftrightarrow[\text{No}]{\text{No}}$ New, W:Add, Z:Discontinued, F:Interchangeable by set, K:Q'ty Change

(C)Copyrights YANMAR CO.,LTD.

Fig.2. LOWER TIMING CASE

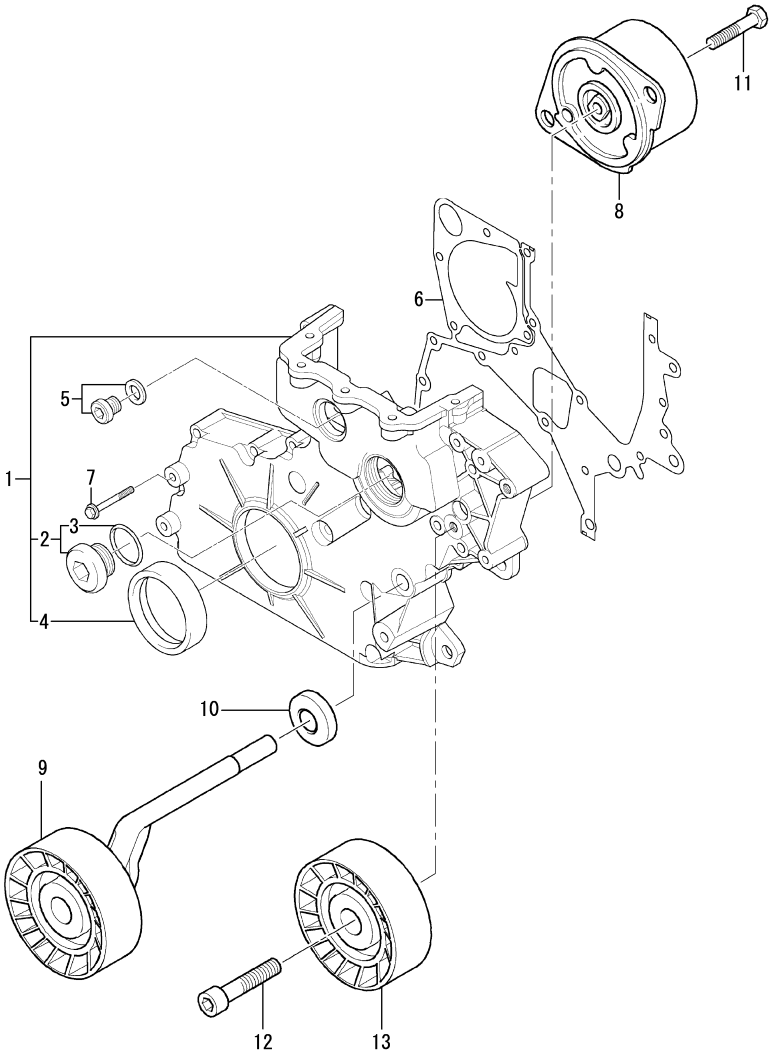

2. LOWER TIMING CASE

(A)=6BY3-220
(B)=6BY3-260
(C)=6BY3-220Z
(D)=6BY3-260Z
(E)=
(F)=

REF.	LEV.	PARTS NO.	DESCRIPTION	Q'TY (A)	(B)	(C)	(D)	(E)	(F)	I	R
1	1	165001-44430	COVER, TIMING CASE	1	1	1	1				
2	2	165000-68390	PLUG, SCREW M40X1.5	1	1	1	1				
3	2	165000-68400	O-RING, 35 2.0	1	1	1	1				
4	2	165000-68420	SEAL, SHAFT 55 68 8	1	1	1	1				
5	1	165000-68410	PLUG, SCREW M30X1	1	1	1	1				
6	1	165001-44420	GASKET, STEEL	1	1	1	1				
7	1	165000-69690	SCREW, TORX M7X38	14	14	14	14				
8	1	165000-69130	TENSIONER, BELT	1	1	1	1				
9	1	165001-35850	TENSIONER, BELT	1	1	1	1				
10	1	165000-69120	SEALING	1	1	1	1				
11	1	165000-67230	BOLT, HEX M6 30	1	1	1	1				
12	1	165000-67330	SCREW, HEAD M8X35	1	1	1	1				
13	1	165000-69170	PULLEY, DEFECTION	1	1	1	1				

N:Old $\overset{\text{Yes}}{\underset{\text{No}}{\leftrightarrows}}$ New, Q:Old $\overset{\text{No}}{\underset{\text{Yes}}{\leftrightarrows}}$ New, R:Old $\overset{\text{Yes}}{\underset{\text{Yes}}{\leftrightarrows}}$ New, S:Old $\overset{\text{No}}{\underset{\text{No}}{\leftrightarrows}}$ New, W:Add, Z:Discontinued, F:Interchangeable by set, K:Q'ty Change

(C)Copyrights YANMAR CO.,LTD.

Fig.3. FLYWHEEL HOUSING

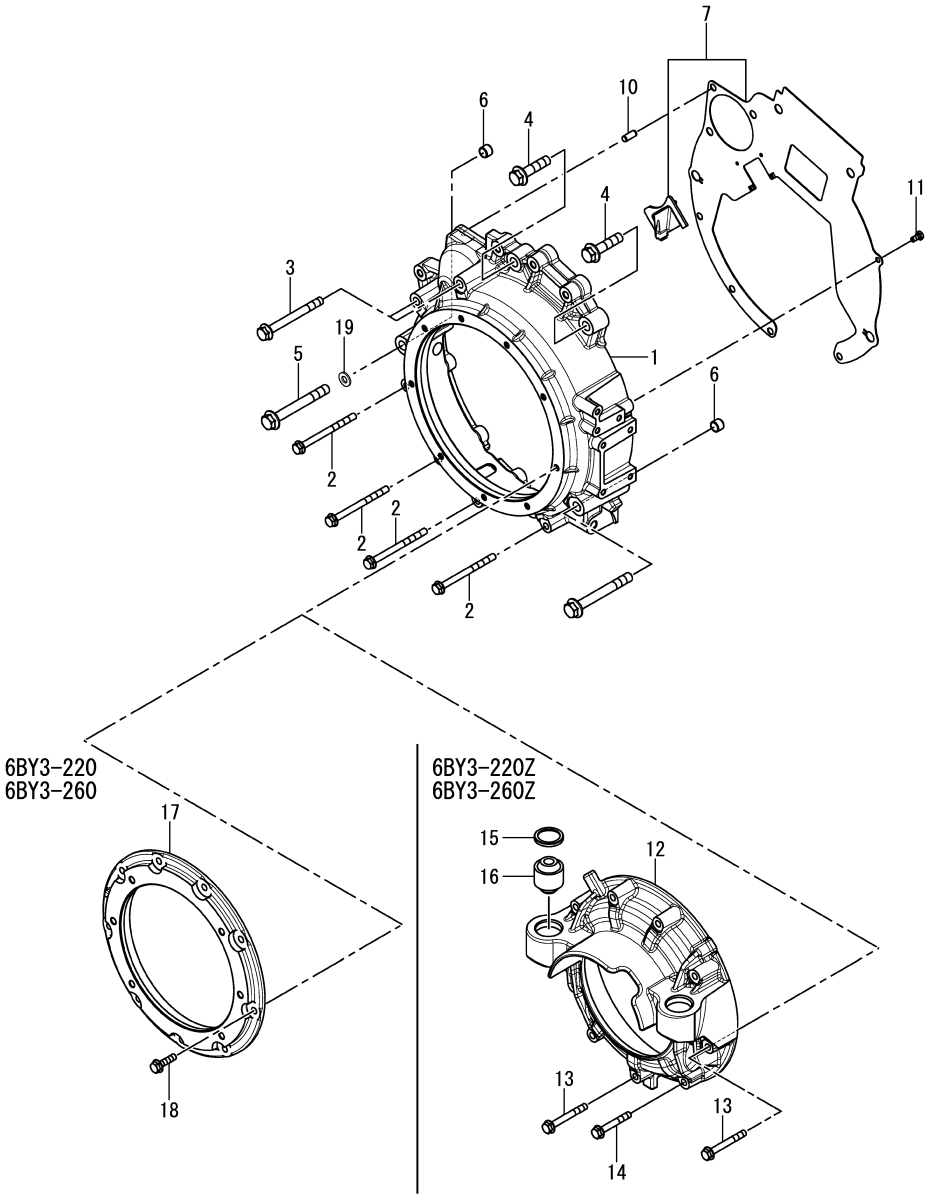

3. FLYWHEEL HOUSING

(A)=6BY3-220
(B)=6BY3-260
(C)=6BY3-220Z
(D)=6BY3-260Z
(E)=
(F)=

REF.	LEV.	PARTS NO.	DESCRIPTION	Q'TY (A)	(B)	(C)	(D)	(E)	(F)	I	R
1	1	120660-01800	HOUSING, FLYWHEEL	1	1	1	1				
2	1	120640-01940	BOLT, M8X100-8.8	4	4	4	4				
3	1	120640-02010	BOLT, M10X100-8.8	2	2	2	2				
4	1	120640-02050	BOLT,M12X130-8.8	2	2	2	2				
5	1	120640-02040	BOLT, M12X100-8.8	2	2	2	2				
6	1	120640-00100	DOWEL PIN, 14.5	2	2	2	2				
7	1	120660-01900	PLATE ASSY, COVER	1	1	1	1				
10	1	120640-00220	PIN, PARALLEL 8X20	1	1	1	1				
11	1	120640-01460	SCREW, M6X12	1	1	1	1				
12	1	120661-01710	COVER, FWH DRIVE			1	1				
13	1	120640-01910	BOLT, M8X65-8.8			8	8				
14	1	120640-01900	BOLT, M8X55-8.8			1	1				
15	1	119778-08350	SPACER			2	2				
16	1	120650-01760	MOUNT, RUBBER REAR			2	2				
17	1	120653-01710	COVER, FWH DRIVE	1	1						
18	1	120640-02130	FLANGE BOLT, 8X30	9	9						
19	1	120640-02250	WASHER	2	2	2	2				

N:Old ◄Yes/No► New, Q:Old ◄No/Yes► New, R:Old ◄Yes/Yes► New, S:Old ◄No/No► New, W:Add, Z:Discontinued, F:Interchangeable by set, K:Q'ty Change

(C)Copyrights YANMAR CO.,LTD.

Fig.4. OIL PAN/LUB. OIL SUMP

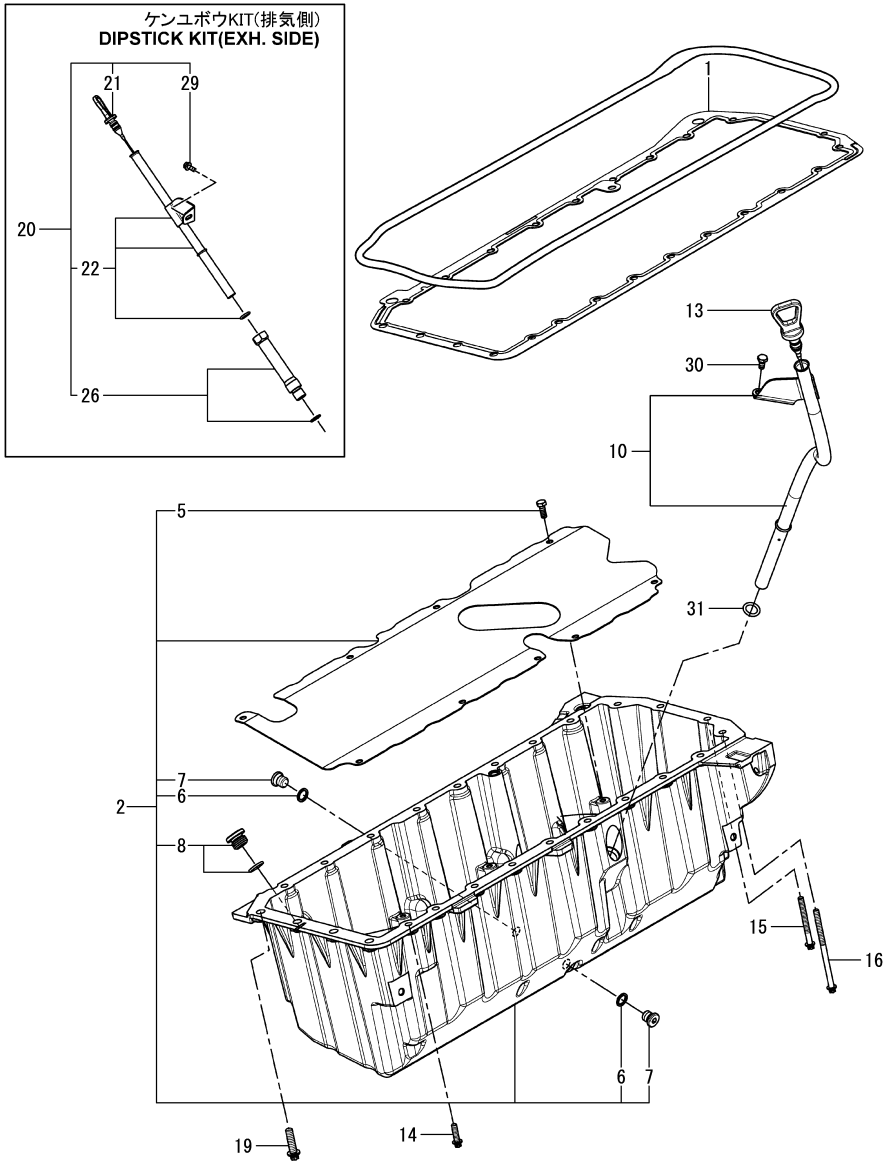

Remarks
(1)Not illustrated.

0CR10-G85600

4. OIL PAN/LUB. OIL SUMP

(A)=6BY3-220
(B)=6BY3-260
(C)=6BY3-220Z
(D)=6BY3-260Z
(E)=
(F)=

REF.	LEV.	PARTS NO.	DESCRIPTION	Q'TY (A)	(B)	(C)	(D)	(E)	(F)	I	R
1	1	165000-68310	GASKET, OIL SUMP	1	1	1	1				
2	1	165000-93260	SUMP,LUB.OIL	1	1	1	1				
5	2	120650-51620	SCREW, M6X16	9	9	9	9				
6	2	120640-01230	RING, SEALING A12X16	2	2	2	2				
7	2	120640-00190	PLUG	2	2	2	2				
8	2	165000-93270	PLUG ASSY (O-RING	1	1	1	1				
10	1	120660-34840	GUIDE ASSY, DIPSTICK	1	1	1	1				
13	1	120660-34800	DIPSTICK, OIL	1	1	1	1				
14	1	165001-35980	BOLT, TORX M6X22	18	18	18	18				
15	1	165001-35810	BOLT, TORX M6X60	2	2	2	2				
16	1	165001-35820	BOLT, TORX M6X100	2	2	2	2				
17	1	165001-25170	BOLT, TORX	3	3	3	3				1
18	1	165000-93230	PLUG,SCREW M10X1	1	1	1	1				1
19	1	165000-93240	RING,GASKET	1	1	1	1				
20	1	120660-34700	DIPSTICK KIT, STBD	1	1	1	1				
21	2	120660-34810	DIPSTICK	1	1	1	1				
22	2	120650-34850	GUIDE ASY, DIPSTICK	1	1	1	1				
26	2	120650-34910	ADAPTOR ASY, GUIDE D	1	1	1	1				
29	2	26106-060122	BOLT	1	1	1	1				
30	1	120640-02080	BOLT, M6X16-8.8	1	1	1	1				
31	1	120650-34890	O-RING, 14X3	1	1	1	1				

N:Old $\overset{\text{Yes}}{\underset{\text{No}}{\leftrightarrows}}$ New, Q:Old $\overset{\text{No}}{\underset{\text{Yes}}{\leftrightarrows}}$ New, R:Old $\overset{\text{Yes}}{\underset{\text{Yes}}{\leftrightarrows}}$ New, S:Old $\overset{\text{No}}{\underset{\text{No}}{\leftrightarrows}}$ New, W:Add, Z:Discontinued, F:Interchangeable by set, K:Q'ty Change

(C)Copyrights YANMAR CO.,LTD.

Fig.5. ENGINE BRACKET

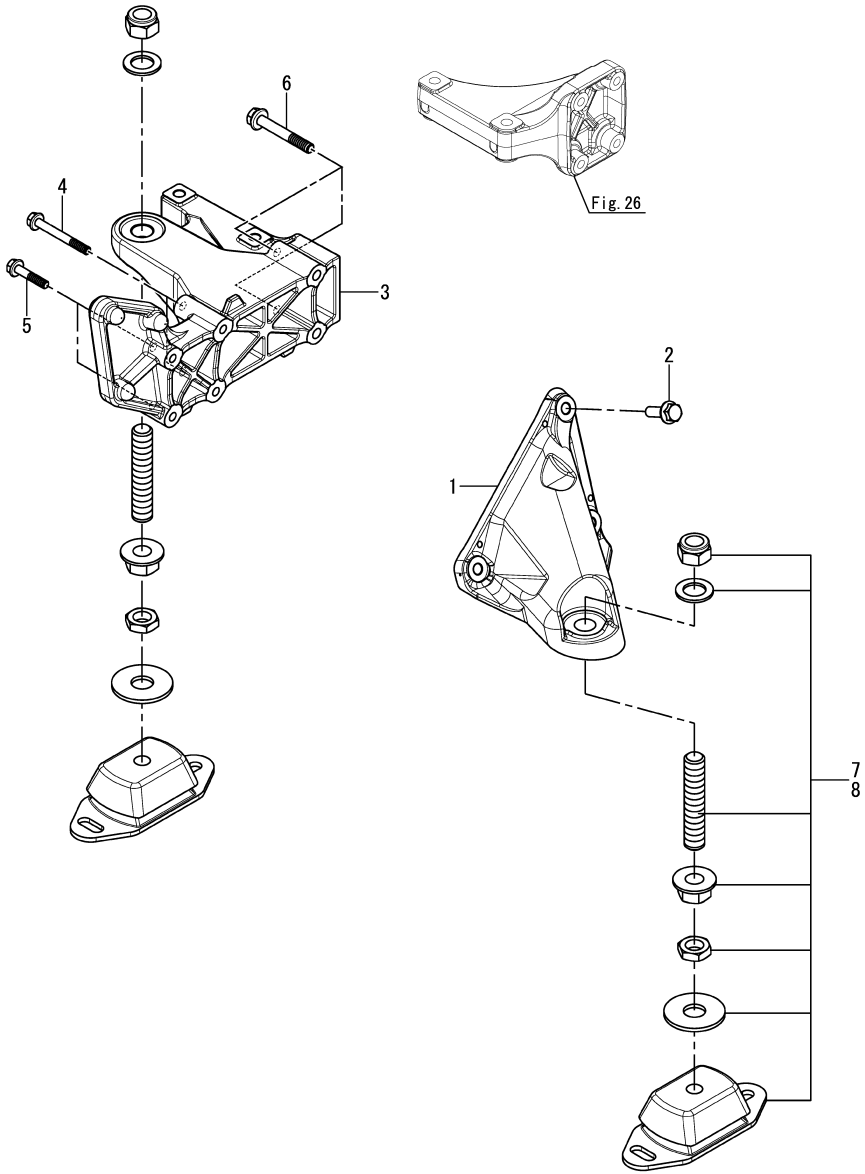

5. ENGINE BRACKET

(A)=6BY3-220
(B)=6BY3-260
(C)=6BY3-220Z
(D)=6BY3-260Z
(E)=
(F)=

REF.	LEV.	PARTS NO.	DESCRIPTION	Q'TY (A)	(B)	(C)	(D)	(E)	(F)	I	R
1	1	120660-08100	FOOT, MOUNTING FL	1	1	1	1				
2	1	120640-01970	BOLT, M10X35-10.9	3	3	3	3				
3	1	120660-08110	FOOT, MOUNTING FR	1	1	1	1				
4	1	120640-01920	BOLT, M8X70-10.9	2	2	2	2				
5	1	120640-01880	BOLT, M8X50-10.9	2	2	2	2				
6	1	120640-02000	BOLT, M10X75-10.9	2	2	2	2				
7	1	120650-08401	MOUNT, ENGINE HS55	2	2	2	2				
8	1	120650-08410	MOUNT, ENGINE HS45	2	2						

N:Old $\xleftrightarrow[\text{No}]{\text{Yes}}$ New, Q:Old $\xleftrightarrow[\text{Yes}]{\text{No}}$ New, R:Old $\xleftrightarrow[\text{Yes}]{\text{Yes}}$ New, S:Old $\xleftrightarrow[\text{No}]{\text{No}}$ New, W:Add, Z:Discontinued, F:Interchangeable by set, K:Q'ty Change

(C)Copyrights YANMAR CO.,LTD.

Fig.6. LABEL

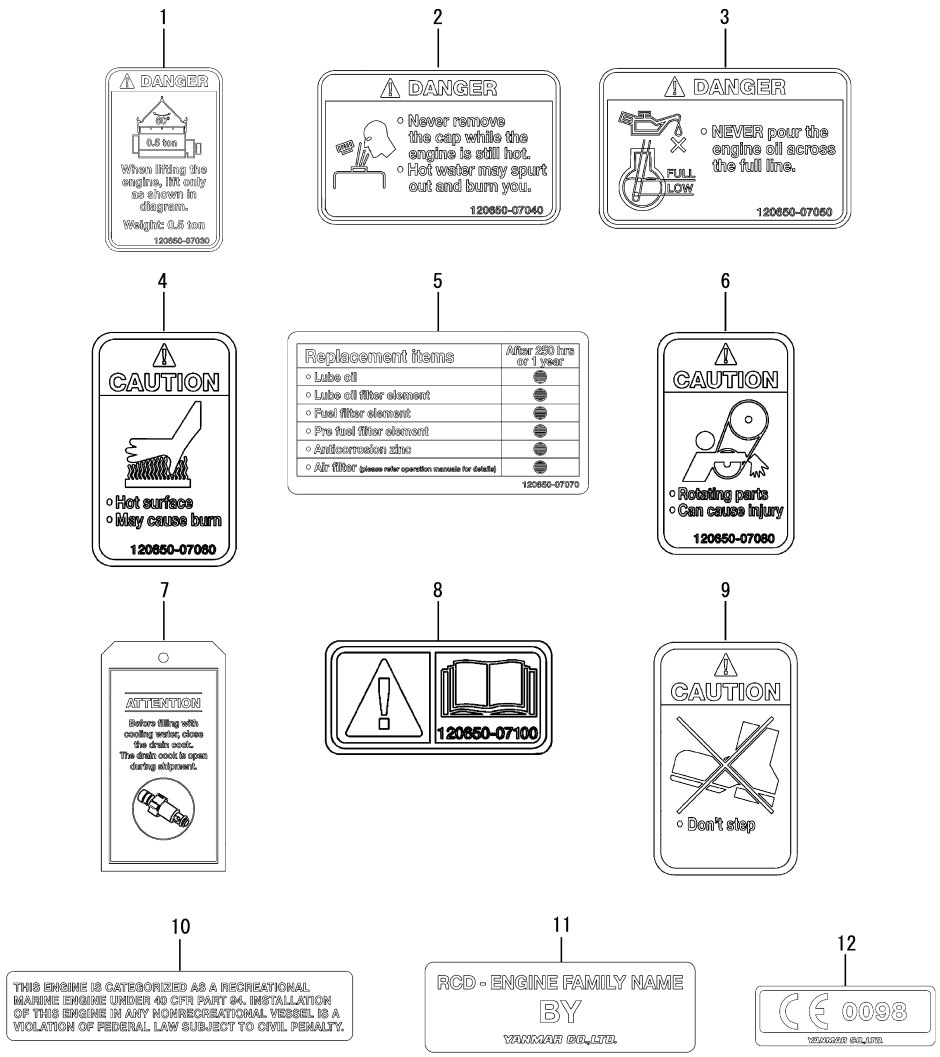

6. LABEL

(A)=6BY3-220
(B)=6BY3-260
(C)=6BY3-220Z
(D)=6BY3-260Z
(E)=
(F)=

REF.	LEV.	PARTS NO.	DESCRIPTION	Q'TY (A)	(B)	(C)	(D)	(E)	(F)	I	R
1	1	120650-07030	LABEL, LIFTER	2	2	2	2				
2	1	120650-07040	LABEL, PRESSURE CAP	1	1	1	1				
3	1	120650-07050	LABEL, OIL DANGER	1	1	1	1				
4	1	120650-07060	LABEL, HOT SURFACE	1	1	1	1				
5	1	120650-07070	LABEL, INTERVAL	1	1	1	1				
6	1	120650-07080	LABEL, ROTATION ENG.	1	1	1	1				
7	1	120650-07090	LABEL, CAUTION DRAIN	1	1	1	1				
8	1	120650-07100	LABEL, MANUAL	1	1	1	1				
9	1	120651-07120	LABEL, CAUTION NO ST	1	1	1	1				
10	1	129672-07100	LABEL,RECREATIONAL	1	1	1	1				
11	1	120650-07161	LABEL,RCD			1	1				
12	1	120650-07171	LABEL,RCD-CE			1	1				

N:Old $\frac{\text{Yes}}{\text{No}}$ New, Q:Old $\frac{\text{No}}{\text{Yes}}$ New, R:Old $\frac{\text{Yes}}{\text{Yes}}$ New, S:Old $\frac{\text{No}}{\text{No}}$ New, W:Add, Z:Discontinued, F:Interchangeable by set, K:Q'ty Change

(C)Copyrights YANMAR CO.,LTD.

Fig.7. CYL.HEAD/VALVE TRAIN-CAMSHAFT

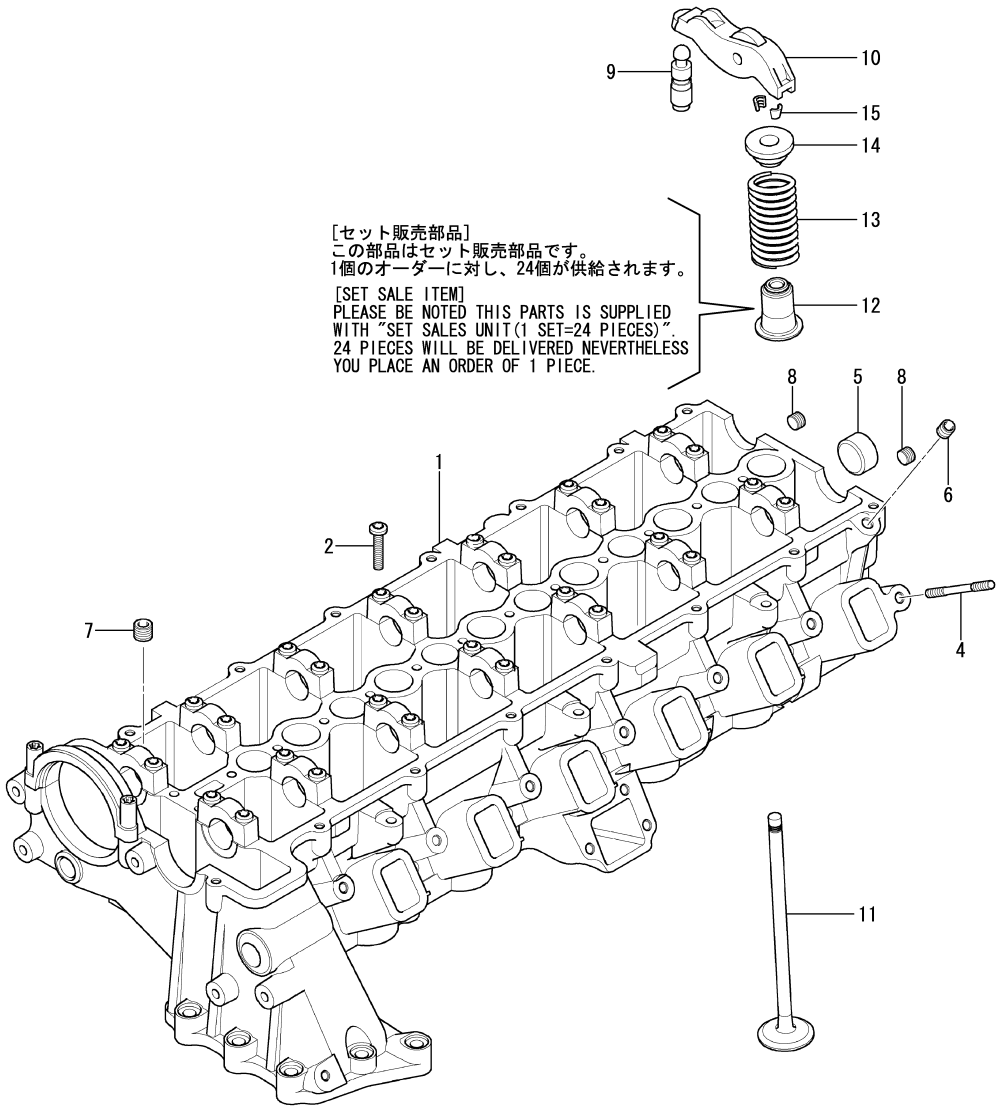

7. CYL.HEAD/VALVE TRAIN-CAMSHAFT

(A)=6BY3-220
(B)=6BY3-260
(C)=6BY3-220Z
(D)=6BY3-260Z
(E)=
(F)=

REF.	LEV.	PARTS NO.	DESCRIPTION	Q'TY (A)	(B)	(C)	(D)	(E)	(F)	I	R
1	1	165001-35920	HEAD, CYLINDER	1	1	1	1				
2	1	165001-66900	BOLT, TORX M6X30	28	28	28	28				
4	1	165001-39240	STUD, M7X65	7	7	7	7				
5	1	165001-66880	COVER, D=24MM	2	2	2	2				
6	1	165001-59970	PLUG, SCREW M8X1	2	2	2	2				
7	1	165001-71670	PLUG, SCREW M12X1.5	1	1	1	1				
8	1	165001-35970	PLUG, SCREW M14X1.5	2	2	2	2				
9	1	165000-69290	ROD, VALVE PUSH	24	24	24	24				
10	1	165000-69280	LEVER, DRAG	24	24	24	24				
11	1	165000-69320	VALVE, 25.9/5.92MM	24	24	24	24				
12	1	165000-69350	SEAL RING SET, VALVE	1	1	1	1				
13	1	165000-69330	SPRING, VALVE	24	24	24	24				
14	1	165000-69310	PLATE, SPRING UPPER	24	24	24	24				
15	1	165000-69300	COLLET, VALVE D=6	48	48	48	48				

N:Old ◄Yes/No► New, Q:Old ◄No/Yes► New, R:Old ◄Yes/Yes► New, S:Old ◄No/No► New, W:Add, Z:Discontinued, F:Interchangeable by set, K:Q'ty Change

(C)Copyrights YANMAR CO.,LTD.

Fig.8. CYL.HEAD ATTACHED/GLOW PLUG

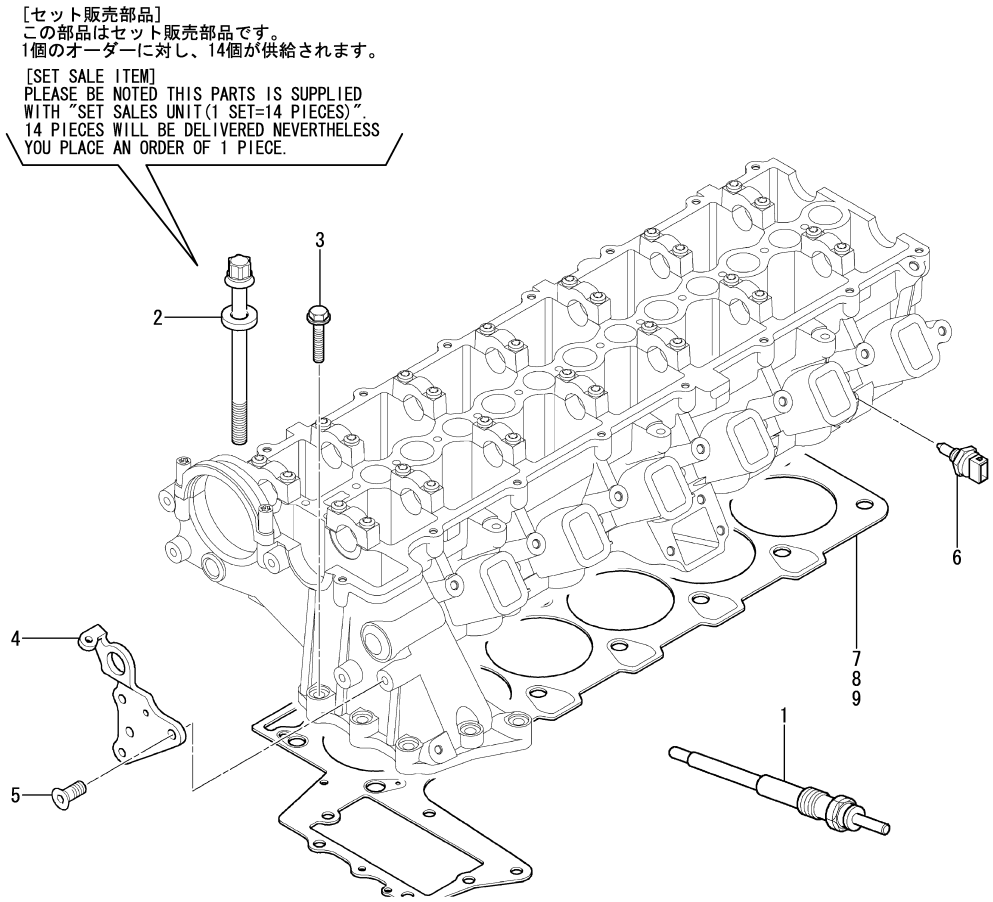

8. CYL.HEAD ATTACHED/GLOW PLUG

(A)=6BY3-220
(B)=6BY3-260
(C)=6BY3-220Z
(D)=6BY3-260Z
(E)=
(F)=

REF.	LEV.	PARTS NO.	DESCRIPTION	Q'TY (A)	(B)	(C)	(D)	(E)	(F)	I	R
1	1	165000-70000	PLUG, GLOW	6	6	6	6				
2	1	165000-68280	BOLT SET, CYL.HEAD	1	1	1	1				
3	1	165001-35680	SCREW, M8X35	7	7	7	7				
4	1	165000-67990	LOOP	1	1	1	1				
5	1	165001-66910	SCREW, COUNTERSUNK	2	2	2	2				
6	1	165000-70660	SENSOR, TEMPERATURE	1	1	1	1				
7	1	165000-68050	GASKET, HEAD 1-HOLE	1	1	1	1				
8	1	165000-68060	GASKET, HEAD 2-HOLE	1	1	1	1				
9	1	165000-68070	GASKET, HEAD 3-HOLE	1	1	1	1				

N:Old ◄Yes/No► New, Q:Old ◄No/Yes► New, R:Old ◄Yes/Yes► New, S:Old ◄No/No► New, W:Add, Z:Discontinued, F:Interchangeable by set, K:Q'ty Change

(C)Copyrights YANMAR CO.,LTD.

Fig.9. CYLINDER HEAD COVER

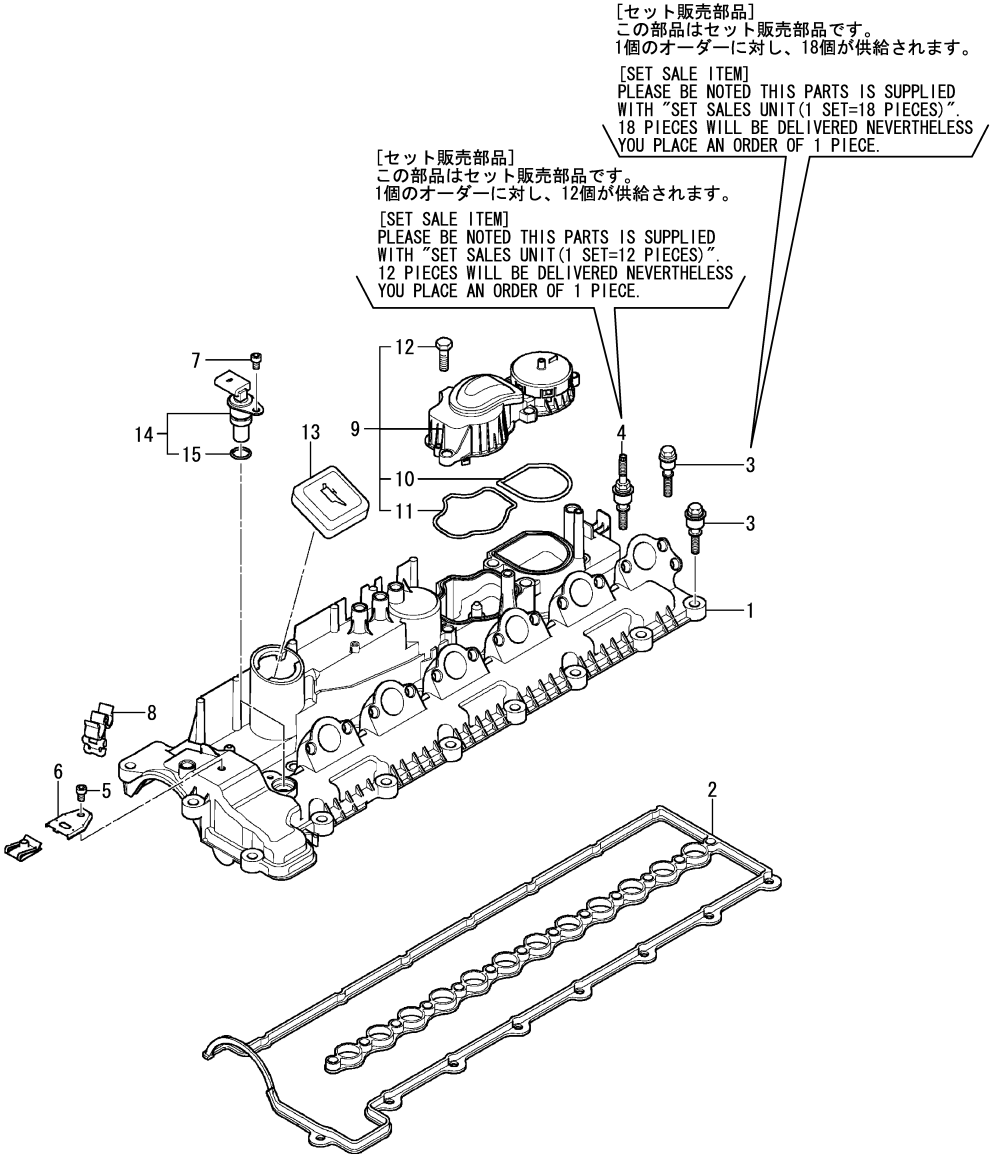

9. CYLINDER HEAD COVER

(A)=6BY3-220
(B)=6BY3-260
(C)=6BY3-220Z
(D)=6BY3-260Z
(E)=
(F)=

REF.	LEV.	PARTS NO.	DESCRIPTION	Q'TY (A)	(B)	(C)	(D)	(E)	(F)	I	R
1	1	165000-68150	COVER, CYLINDER HEAD	1	1	1	1				
2	1	165000-68240	GASKET, PROFILE	1	1	1	1				
3	1	165001-35780	ELEMENT, OUTER	1	1	1	1				
4	1	165001-39220	ELEMENT, INNER	1	1	1	1				
5	1	165001-66870	SCREW, M6X12	1	1	1	1				
6	1	165000-68010	BRACKET, METAL	1	1	1	1				
7	1	165001-66920	BOLT,PLASTIC M5X19.5	1	1	1	1				
8	1	165000-68230	CLAMP, HOSE D=6/8MM	1	1	1	1				
9	1	165000-68180	BREATHER	1	1	1	1				
10	2	165000-68160	GASKET, PROFILE	1	1	1	1				
11	2	165000-68170	GASKET, PROFILE	1	1	1	1				
12	2	165000-69910	BOLT, HEX	4	4	4	4				
13	1	165000-71020	COVER	1	1	1	1				
14	1	165000-70700	GENERATOR, PULSE	1	1	1	1				
15	2	165000-70730	O-RING, 17X2.8	1	1	1	1				

N:Old $\frac{\text{Yes}}{\text{No}}$ New, Q:Old $\frac{\text{No}}{\text{Yes}}$ New, R:Old $\frac{\text{Yes}}{\text{Yes}}$ New, S:Old $\frac{\text{No}}{\text{No}}$ New, W:Add, Z:Discontinued, F:Interchangeable by set, K:Q'ty Change

(C)Copyrights YANMAR CO.,LTD.

Fig.10. INTAKE MANIFOLD

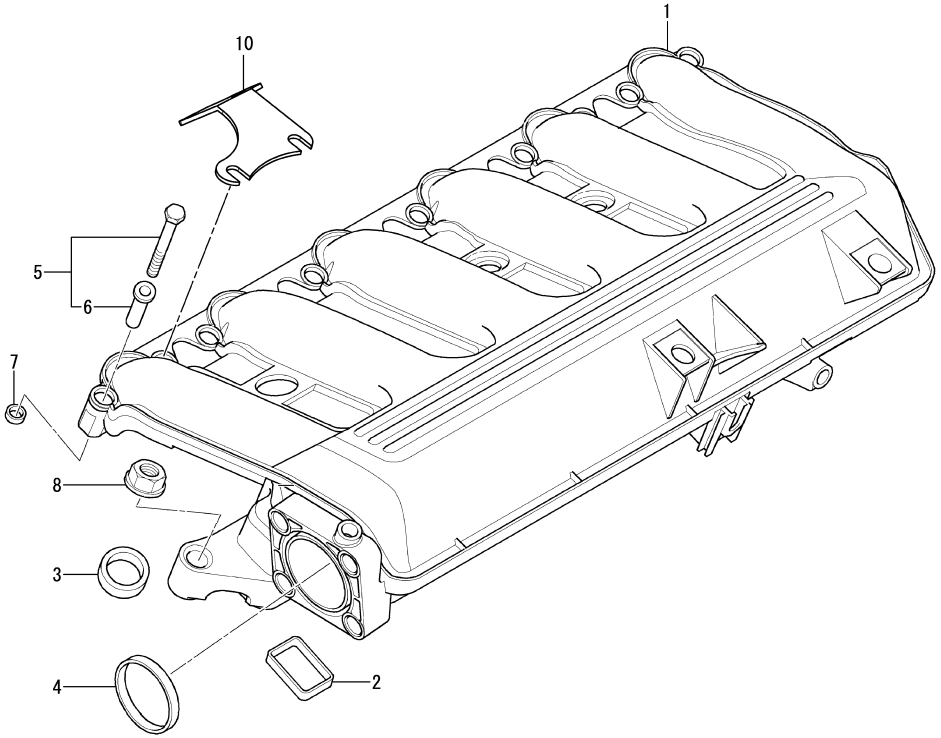

Remarks
(1)Not illustrated.

10. INTAKE MANIFOLD

(A)=6BY3-220
(B)=6BY3-260
(C)=6BY3-220Z
(D)=6BY3-260Z
(E)=
(F)=

REF.	LEV.	PARTS NO.	DESCRIPTION	Q'TY (A)	(B)	(C)	(D)	(E)	(F)	I	R
1	1	165000-69870	MANIFOLD, INTAKE	1	1	1	1				
2	1	165000-69860	GASKET, PROFILE	6	6	6	6				
3	1	165000-69810	GASKET, PROFILE	6	6	6	6				
4	1	165000-69800	SEALING, RUBBER	1	1	1	1				
5	1	165000-69830	FASTEN, ELEMENT 6X42	12	12	12	12				
6	1	165000-69820	MOUNTING, RUBBER	7	7	7	7				
7	1	165000-69840	RING, BACKUP	7	7	7	7				
8	1	165001-35790	NUT, FLANGE M7	7	7	7	7				
9	1	165000-69850	BOX, VACUMM	1	1	1	1				1
10	1	120660-17290	SUPPORT,COVER 6BY	2	2	2	2				

N:Old $\frac{\text{Yes}}{\text{No}}$ New, Q:Old $\frac{\text{No}}{\text{Yes}}$ New, R:Old $\frac{\text{Yes}}{\text{Yes}}$ New, S:Old $\frac{\text{No}}{\text{No}}$ New, W:Add, Z:Discontinued, F:Interchangeable by set, K:Q'ty Change

(C)Copyrights YANMAR CO.,LTD.

Fig.11. TURBOCHARGER

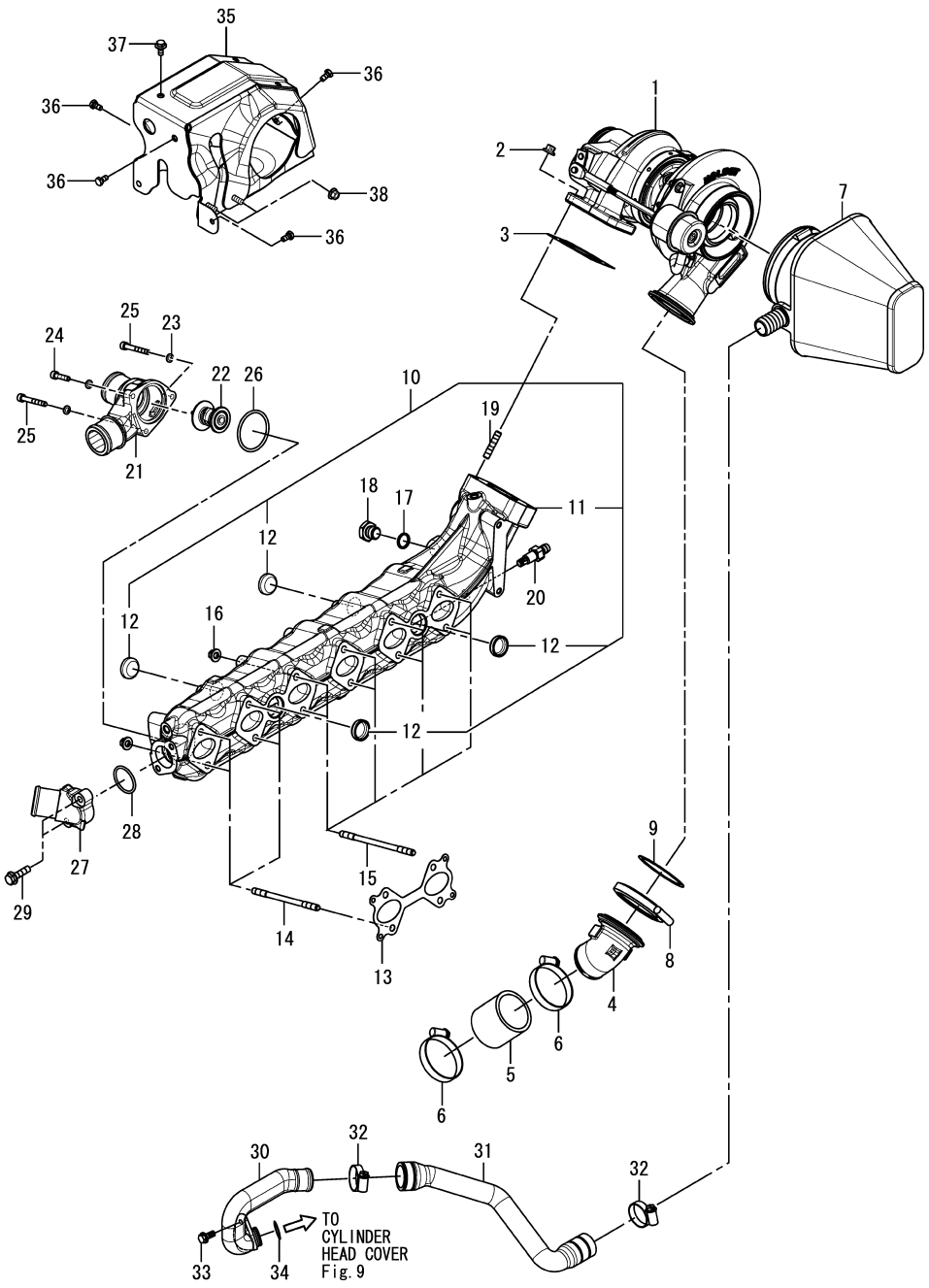

11. TURBOCHARGER

(A)=6BY3-220
(B)=6BY3-260
(C)=6BY3-220Z
(D)=6BY3-260Z
(E)=
(F)=

REF.	LEV.	PARTS NO.	DESCRIPTION	Q'TY (A)	(B)	(C)	(D)	(E)	(F)	I	R
1	1	120661-18010	TURBINE, HOLSET	1	1	1	1				
2	1	120650-13070	NUT, M8	4	4	4	4				
3	1	120660-18200	GASKET, TURBO IN	1	1	1	1				
4	1	120660-18050	ELBOW, AIR CHARGE	1	1	1	1				
5	1	120650-18900	HOSE, COMPRESSOR OUT	1	1	1	1				
6	1	120650-49720	CLAMP, HOSE	2	2	2	2				
7	1	120660-12510	FILTER, AIR	1	1	1	1				
8	1	120660-18140	V-CLAMP	1	1	1	1				
9	1	120660-18210	GASKET, AIR CHARGE	1	1	1	1				
10	1	120660-13160	EXHAUST MANIFOLD ASM	1	1	1	1				
11	2	120660-13040	MANIFOLD, EXHAUST	1	1	1	1				
12	2	120650-13170	PLUG ASSY, MANIFOLD	4	4	4	4				
13	1	120640-00040	GASKET, EXH.MANIFOLD	3	3	3	3				
14	1	120650-13130	STUD,BOLT 8 X 129	4	4	4	4				
15	1	120650-13140	STUD,BOLT 8 X 144	8	8	8	8				
16	1	120650-13070	NUT, M8	12	12	12	12				
17	1	120640-01260	RING, SEALING A17X21	1	1	1	1				
18	1	23894-030002	PLUG	1	1	1	1				
19	1	120650-13090	STUD,BOLT 8 TURBO	4	4	4	4				
20	1	120650-49610	PLUG, DRAIN	1	1	1	1				
21	1	120650-44560	COVER,THERMOSTAT	1	1	1	1				
22	1	120650-44570	THERMOSTAT	1	1	1	1				
23	1	120640-02220	WASHER	3	3	3	3				
24	1	120640-01590	SCREW, M6X25	1	1	1	1				
25	1	120640-01500	SCREW, M6X45	2	2	2	2				
26	1	120650-44580	O-RING, THERMOSTAT	1	1	1	1				
27	1	120650-44540	ELBOW, EXHAUST MANIF	1	1	1	1				
28	1	120650-44590	O-RING, ELBOW EXHAUS	1	1	1	1				
29	1	120640-02130	FLANGE BOLT, 8X30	2	2	2	2				
30	1	120660-11411	PIPE, BLOWBY	1	1	1	1				
31	1	120660-11430	HOSE, BLOWBY	1	1	1	1				
32	1	120640-01030	CLAMP, HOSE 40X13	2	2	2	2				
33	1	120640-01460	SCREW, M6X12	1	1	1	1				
34	1	120661-11460	O-RING, 23.0X2.0	1	1	1	1				
35	1	120661-18300	PROTECTOR, HEAT TURB	1	1	1	1				
36	1	120640-01460	SCREW, M6X12	4	4	4	4				
37	1	120640-02080	BOLT, M6X16-8.8	1	1	1	1				
38	1	120640-00320	NUT, FLANGE M6	2	2	2	2				

N:Old $\frac{\text{Yes}}{\text{No}}$ New, Q:Old $\frac{\text{No}}{\text{Yes}}$ New, R:Old $\frac{\text{Yes}}{\text{Yes}}$ New, S:Old $\frac{\text{No}}{\text{No}}$ New, W:Add, Z:Discontinued, F:Interchangeable by set, K:Q'ty Change

(C)Copyrights YANMAR CO.,LTD.

Fig.12. AIR FILTER

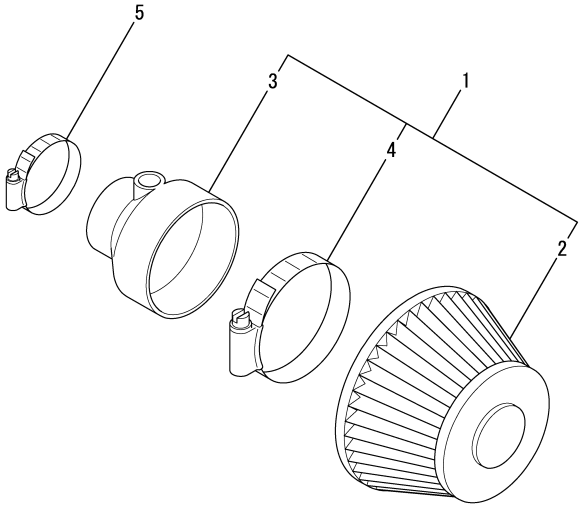

0CR10-G85600 12. AIR FILTER

(A)=6BY3-220
(B)=6BY3-260
(C)=6BY3-220Z
(D)=6BY3-260Z
(E)=
(F)=

REF.	LEV.	PARTS NO.	DESCRIPTION	Q'TY (A)	(B)	(C)	(D)	(E)	(F)	I	R
1	1	120660-12550	FILTER ASSY, AIR	1	1	1	1				
2	2	120650-12560	FILTER, AIR	1	1	1	1				
3	2	120660-12570	HOSE, AIR	1	1	1	1				
4	2	120650-12580	CLAMP, HOSE	1	1	1	1				
5	1	120660-12590	CLAMP, HOSE	1	1	1	1				

N:Old $\xleftrightarrow[\text{No}]{\text{Yes}}$ New, Q:Old $\xleftrightarrow[\text{Yes}]{\text{No}}$ New, R:Old $\xleftrightarrow[\text{Yes}]{\text{Yes}}$ New, S:Old $\xleftrightarrow[\text{No}]{\text{No}}$ New, W:Add, Z:Discontinued, F:Interchangeable by set, K:Q'ty Change

(C)Copyrights YANMAR CO.,LTD.

Fig.13. C.S.W.PIPE & EXHAUST BEND(OPTION)

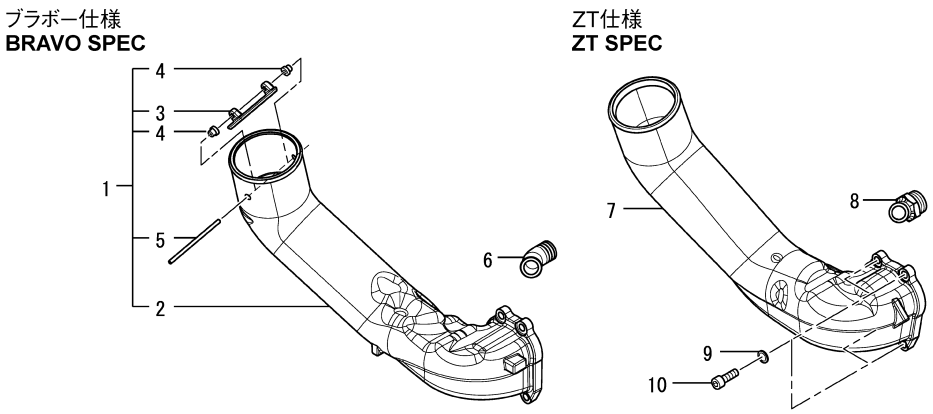

0CR10-G85600

13. C.S.W.PIPE & EXHAUST BEND(OPTION)

(A)=6BY3-220
(B)=6BY3-260
(C)=6BY3-220Z
(D)=6BY3-260Z
(E)=
(F)=

REF.	LEV.	PARTS NO.	DESCRIPTION	Q'TY (A)	(B)	(C)	(D)	(E)	(F)	I	R
1	1	120650-13601	PIPE, EXHAUST CMP			1	1				
2	2	120650-13610	PIPE, EXHAUST			1	1				
3	2	120650-13660	FLAP,EXHAUST PIPE			1	1				
4	2	120650-13670	BUSH,EXHAUST PIPE			2	2				
5	2	120650-13680	PIN,EXHAUST PIPE			1	1				
6	1	119175-49550	JOINT			1	1				
7	1	120651-13600	PIPE, EXHAUST			1	1				
8	1	119779-49550	ELBOW,SEA WATER			1	1				
9	1	22113-100000	WASHER			4	4				
10	1	26453-100302	BOLT			4	4				

N:Old $\xleftrightarrow[\text{No}]{\text{Yes}}$ New, Q:Old $\xleftrightarrow[\text{Yes}]{\text{No}}$ New, R:Old $\xleftrightarrow[\text{Yes}]{\text{Yes}}$ New, S:Old $\xleftrightarrow[\text{No}]{\text{No}}$ New, W:Add, Z:Discontinued, F:Interchangeable by set, K:Q'ty Change

(C)Copyrights YANMAR CO.,LTD.

Fig.14. CRANKSHAFT WITH BEARING SHELLS

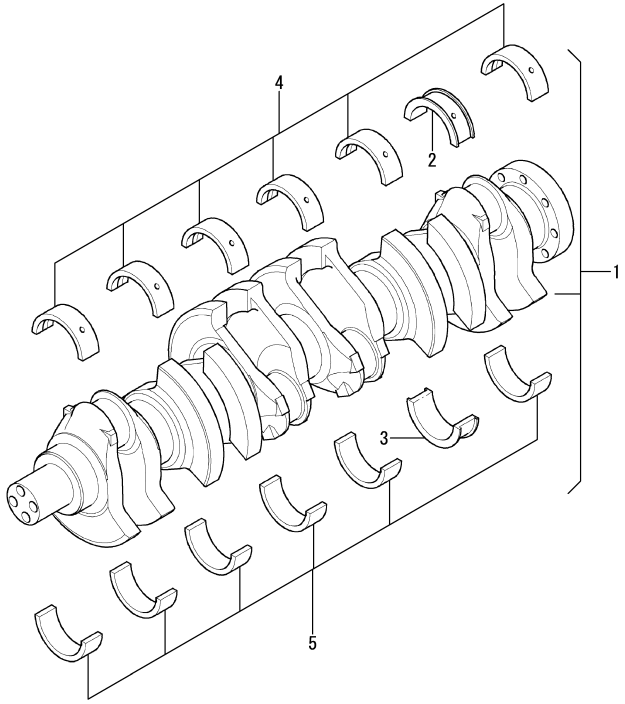

Remarks
(1)Yellow
(2)Green
(3)White

14. CRANKSHAFT WITH BEARING SHELLS

(A)=6BY3-220
(B)=6BY3-260
(C)=6BY3-220Z
(D)=6BY3-260Z
(E)=
(F)=

REF.	LEV.	PARTS NO.	DESCRIPTION	Q'TY (A)	(B)	(C)	(D)	(E)	(F)	I	R
1	1	165000-68850	CRANKSHAFT ASSY	1	1	1	1				
2AG	1	165000-68650	GUIDE, SHILL 60.00MM	1	1	1	1				2
2AW	1	165000-68660	GUIDE, SHILL 60.00MM	1	1	1	1				3
2AY	1	165000-68640	GUIDE, SHILL 60.00MM	1	1	1	1				1
2BG	1	165000-68680	GUIDE, 59.75MM +0.25	1	1	1	1				2
2BW	1	165000-68690	GUIDE, 59.75MM +0.25	1	1	1	1				3
2BY	1	165000-68670	GUIDE, 59.75MM +0.25	1	1	1	1				1
2CG	1	165000-68710	GUIDE, 59.50MM +0.50	1	1	1	1				2
2CW	1	165000-68720	GUIDE, 59.50MM +0.50	1	1	1	1				3
2CY	1	165000-68700	GUIDE, 59.50MM +0.50	1	1	1	1				1
3AG	1	165000-68740	GUIDE, SHILL 60.00MM	1	1	1	1				2
3AW	1	165000-68750	GUIDE, SHILL 60.00MM	1	1	1	1				3
3AY	1	165000-68730	GUIDE, SHILL 60.00MM	1	1	1	1				1
3BG	1	165000-68770	GUIDE, 59.75MM +0.25	1	1	1	1				2
3BW	1	165000-68780	GUIDE, 59.75MM +0.25	1	1	1	1				3
3BY	1	165000-68760	GUIDE, 59.75MM +0.25	1	1	1	1				1
3CG	1	165000-68800	GUIDE, 59.50MM +0.50	1	1	1	1				2
3CW	1	165000-68810	GUIDE, 59.50MM +0.50	1	1	1	1				3
3CY	1	165000-68790	GUIDE, 59.50MM +0.50	1	1	1	1				1
4AG	1	165000-68560	SHELL, BEARING 60.00	6	6	6	6				2
4AW	1	165000-68570	SHELL, BEARING 60.00	6	6	6	6				3
4AY	1	165000-68550	SHELL, BEARING 60.00	6	6	6	6				1
4BG	1	165000-68590	SHELL, 59.75MM +0.25	6	6	6	6				2
4BW	1	165000-68600	SHELL, 59.75MM +0.25	6	6	6	6				3
4BY	1	165000-68580	SHELL, 59.75MM +0.25	6	6	6	6				1
4CG	1	165000-68620	SHELL, 59.50MM +0.50	6	6	6	6				2
4CW	1	165000-68630	SHELL, 59.50MM +0.50	6	6	6	6				3
4CY	1	165000-68610	SHELL, 59.50MM +0.50	6	6	6	6				1
5AG	1	165000-68470	SHELL, BEARING 60.00	6	6	6	6				2
5AW	1	165000-68480	SHELL, BEARING 60.00	6	6	6	6				3
5AY	1	165000-68460	SHELL, BEARING 60.00	6	6	6	6				1
5BG	1	165000-68500	SHELL, 59.75MM +0.25	6	6	6	6				2
5BW	1	165000-68510	SHELL, 59.75MM +0.25	6	6	6	6				3
5BY	1	165000-68490	SHELL, 59.75MM +0.25	6	6	6	6				1
5CG	1	165000-68530	SHELL, 59.50MM +0.50	6	6	6	6				2
5CW	1	165000-68540	SHELL, 59.50MM +0.50	6	6	6	6				3
5CY	1	165000-68520	SHELL, 59.50MM +0.50	6	6	6	6				1

N:Old $\xleftrightarrow[\text{No}]{\text{Yes}}$ New, Q:Old $\xleftrightarrow[\text{Yes}]{\text{No}}$ New, R:Old $\xleftrightarrow[\text{Yes}]{\text{Yes}}$ New, S:Old $\xleftrightarrow[\text{No}]{\text{No}}$ New, W:Add, Z:Discontinued, F:Interchangeable by set, K:Q'ty Change

(C)Copyrights YANMAR CO.,LTD.

Fig.15. FLYWHEEL & CYL.MOUNTING PARTS

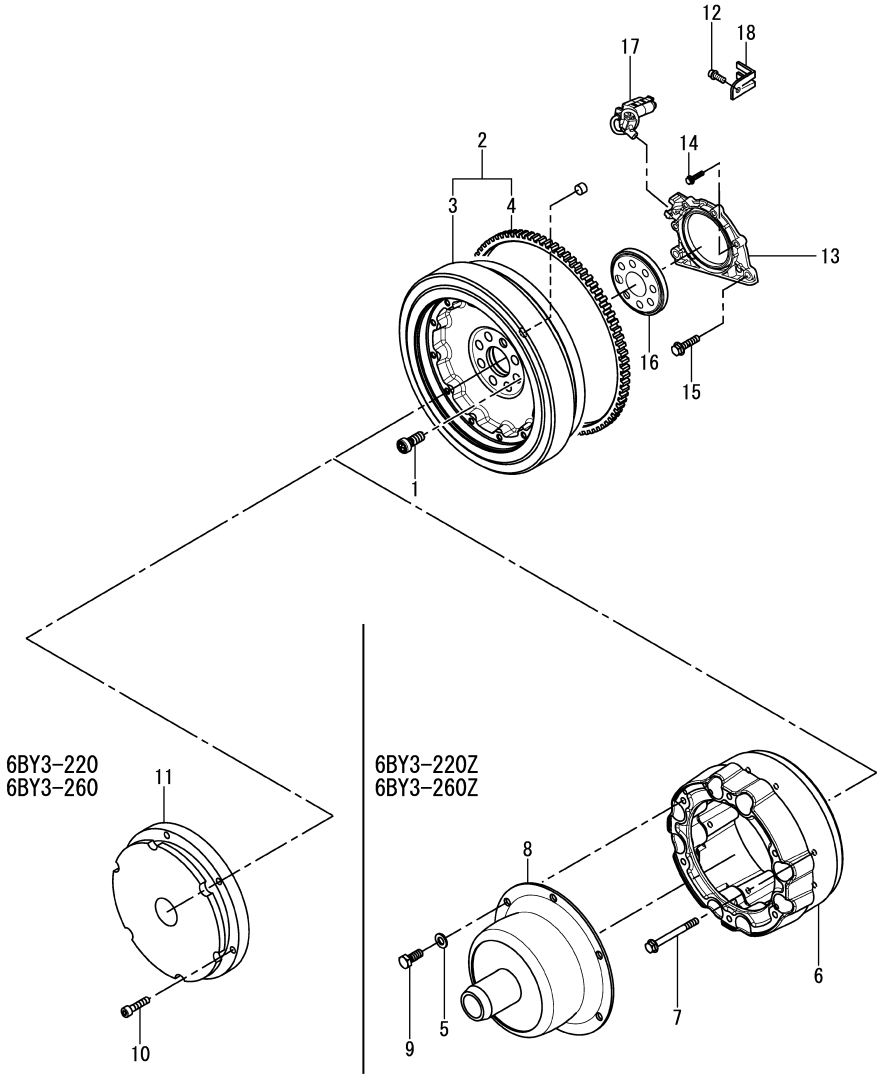

15. FLYWHEEL & CYL.MOUNTING PARTS

(A)=6BY3-220
(B)=6BY3-260
(C)=6BY3-220Z
(D)=6BY3-260Z
(E)=
(F)=

REF.	LEV.	PARTS NO.	DESCRIPTION	Q'TY (A)	(B)	(C)	(D)	(E)	(F)	I	R
1	1	120640-00240	SCREW, FLYWHEEL	8	8	8	8				
2	1	120661-21400	FLYWHHEL ASSY	1	1	1	1				
3	2	120661-21410	FLYWHHEL	1	1	1	1				
4	2	120660-21420	GEAR, RING	1	1	1	1				
5	1	120640-02210	WASHER			6	6				
6	1	120661-21470	FLYWHEEL ADAPTER			1	1				
7	1	120640-01880	BOLT, M8X50-10.9			8	8				
8	1	119778-85500	COUPLING ASSY			1	1				
9	1	120640-01560	SCREW, M10X25			6	6				
10	1	120640-01540	SCREW, M8X35	6	6						
11	1	120652-21603	COUPLING,DAMPER DS22	1	1						
12	1	165001-66870	SCREW, M6X12	1	1	1	1				
13	1	165000-68440	CAP, W/SEAL	1	1	1	1				
14	1	165000-66930	BOLT, HEX M6 25	4	4	4	4				
15	1	165001-66850	BOLT, HEX M8X28	2	2	2	2				
16	1	165000-93310	WHEEL,GENERATOR	1	1	1	1				
17	1	165000-70680	SENSOR, CRANKSHAFT	1	1	1	1				
18	1	165001-71750	TERMINAL, PLUG	1	1	1	1				

N:Old $\xleftrightarrow[\text{No}]{\text{Yes}}$ New, Q:Old $\xleftrightarrow[\text{Yes}]{\text{No}}$ New, R:Old $\xleftrightarrow[\text{Yes}]{\text{Yes}}$ New, S:Old $\xleftrightarrow[\text{No}]{\text{No}}$ New, W:Add, Z:Discontinued, F:Interchangeable by set, K:Q'ty Change

(C)Copyrights YANMAR CO.,LTD.

Fig.16. PISTON & CONNECTING ROD

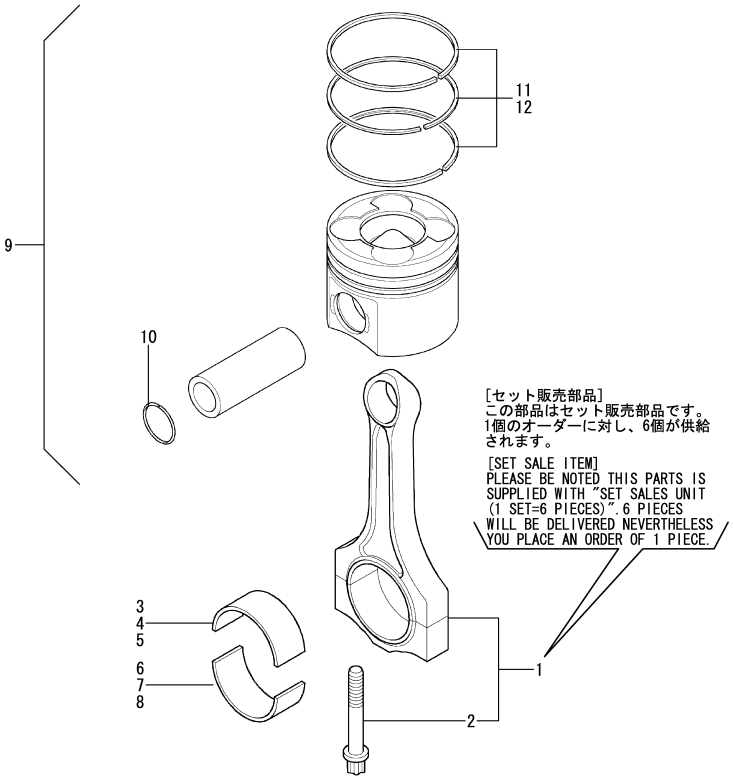

Remarks
(1)Can be paired with No6 only.
(2)Can be paired with No7 only.
(3)Can be paired with No8 only.
(4)Can be paired with No3 only.
(5)Can be paired with No4 only.
(6)Can be paired with No5 only.

0CR10-G85600

16. PISTON & CONNECTING ROD

(A)=6BY3-220
(B)=6BY3-260
(C)=6BY3-220Z
(D)=6BY3-260Z
(E)=
(F)=

REF.	LEV.	PARTS NO.	DESCRIPTION	Q'TY (A)	(B)	(C)	(D)	(E)	(F)	I	R
1	1	165000-69060	ROD, RMFD CONNECTING	1	1	1	1				
2	2	165000-68930	BOLT, CONNECTING ROD	12	12	12	12				
3	1	165001-71680	SHELL, BEARING 45.00	6	6	6	6				1
4	1	165001-71690	SHELL, 44.75MM +0.25	6	6	6	6				2
5	1	165001-71700	SHELL, 44.50MM +0.50	6	6	6	6				3
6	1	165001-71710	SHELL, BEARING 45.00	6	6	6	6				4
7	1	165001-71720	SHELL, 44.75MM +0.25	6	6	6	6				5
8	1	165001-71730	SHELL, 44.50MM +0.50	6	6	6	6				6
9	1	165000-69100	PISTON, MAHLE	6	6	6	6				
10	2	165000-69070	RING, LOCK	12	12	12	12				
11	2	165000-69080	RING SET, PISTON	6	6	6	6				
12	1	165000-69090	RING SET, PISTON .25	6	6	6	6				

N:Old $\xleftrightarrow[\text{No}]{\text{Yes}}$ New, Q:Old $\xleftrightarrow[\text{Yes}]{\text{No}}$ New, R:Old $\xleftrightarrow[\text{Yes}]{\text{Yes}}$ New, S:Old $\xleftrightarrow[\text{No}]{\text{No}}$ New, W:Add, Z:Discontinued, F:Interchangeable by set, K:Q'ty Change

(C)Copyrights YANMAR CO.,LTD.

Fig.17. TIMING CHAIN LOWER P/DAMPER

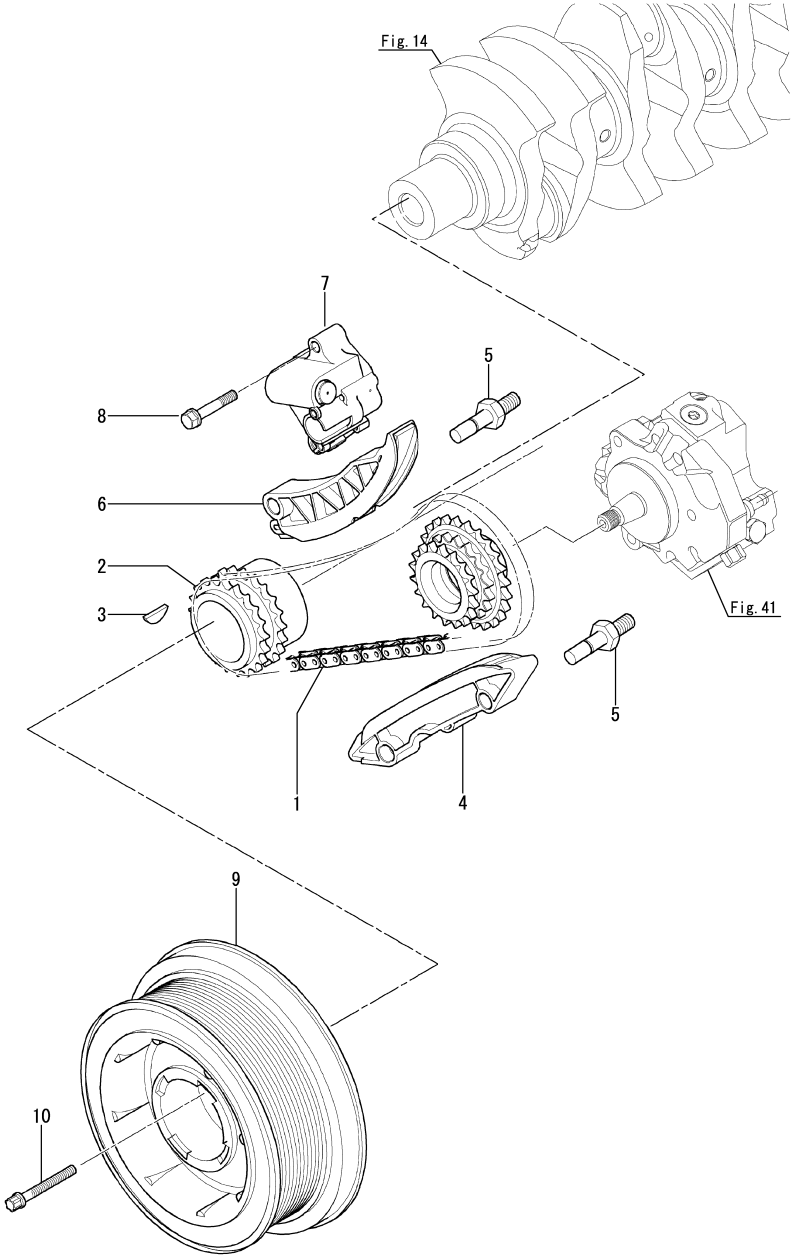

Remarks
(1)Not illustrated.

0CR10-G85600

17. TIMING CHAIN LOWER P/DAMPER

(A)=6BY3-220
(B)=6BY3-260
(C)=6BY3-220Z
(D)=6BY3-260Z
(E)=
(F)=

REF.	LEV.	PARTS NO.	DESCRIPTION	Q'TY (A)	(B)	(C)	(D)	(E)	(F)	I	R
1	1	165001-60000	CHAIN, TIMING	1	1	1	1				
2	1	165001-35990	SPROCKET, CRANKSHAFT	1	1	1	1				
3	1	165000-67430	KEY, WOODRUFF 5X6.5	1	1	1	1				
4	1	165000-70230	RAIL, GUIDE	1	1	1	1				
5	1	165000-67730	BOLT, BEARING	3	3	3	3				
6	1	165000-70220	TENSIONER, CHAIN	1	1	1	1				
7	1	165000-70250	TENSIONER, CHAIN	1	1	1	1				
8	1	165000-67110	BOLT, HEX M6 30	3	3	3	3				
9	1	165000-68900	DAMPER, VIBRATION	1	1	1	1				
10	1	165000-68870	BOLT, TORX M10X86	4	4	4	4				
11	1	165001-36000	O-RING,SPROCKET	1	1	1	1				1

N:Old ←Yes/No→ New, Q:Old ←No/Yes→ New, R:Old ←Yes/Yes→ New, S:Old ←No/No→ New, W:Add, Z:Discontinued, F:Interchangeable by set, K:Q'ty Change

(C)Copyrights YANMAR CO.,LTD.

Fig.18. CAMSHAFT & TIMING GEAR CHAIN

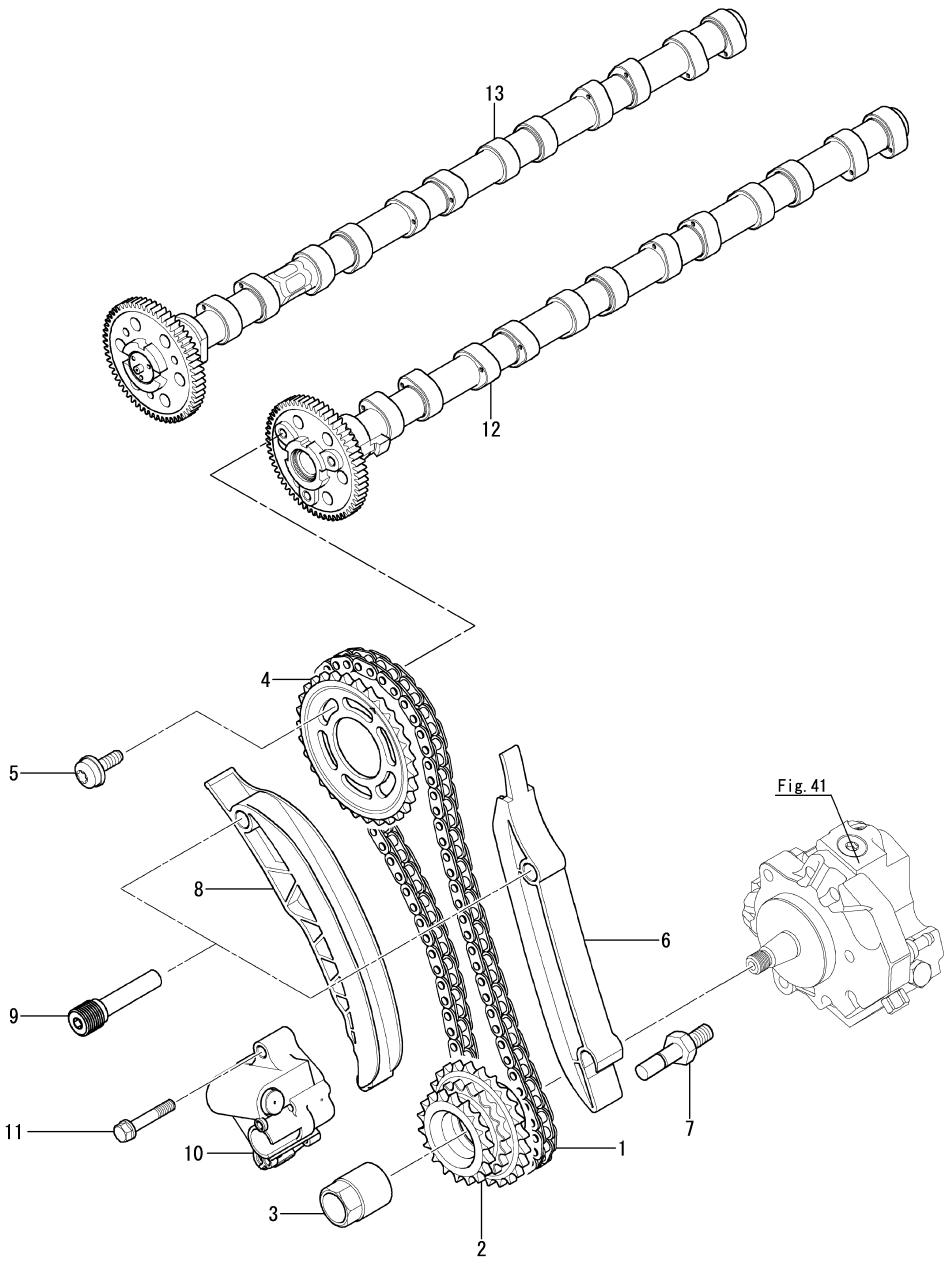

0CR10-G85600

18. CAMSHAFT & TIMING GEAR CHAIN

(A)=6BY3-220
(B)=6BY3-260
(C)=6BY3-220Z
(D)=6BY3-260Z
(E)=
(F)=

REF.	LEV.	PARTS NO.	DESCRIPTION	Q'TY (A)	(B)	(C)	(D)	(E)	(F)	I	R
1	1	165001-59990	CHAIN, TIMING	1	1	1	1				
2	1	165000-70240	SPROCKET, PUMP	1	1	1	1				
3	1	165000-70210	NUT, HEXAGON M14X1.5	1	1	1	1				
4	1	165000-69240	SPROCKET, CAMSHAFT	1	1	1	1				
5	1	165000-69270	SCREW, ISA M7X18	3	3	3	3				
6	1	165000-69200	RAIL, GUIDE	1	1	1	1				
7	1	165000-67760	BOLT, BEARING	1	1	1	1				
8	1	165000-69190	TENSIONER, CHAIN	1	1	1	1				
9	1	165001-35830	BOLT, BEARING	2	2	2	2				
10	1	165000-70250	TENSIONER, CHAIN	1	1	1	1				
11	1	165000-67110	BOLT, HEX M6 30	3	3	3	3				
12	1	165000-69250	CAMSHAFT, INLET	1	1	1	1				
13	1	165000-69260	CAMSHAFT, OUTLET	1	1	1	1				

N:Old $\frac{\text{Yes}}{\text{No}}$ New, Q:Old $\frac{\text{No}}{\text{Yes}}$ New, R:Old $\frac{\text{Yes}}{\text{Yes}}$ New, S:Old $\frac{\text{No}}{\text{No}}$ New, W:Add, Z:Discontinued, F:Interchangeable by set, K:Q'ty Change

(C)Copyrights YANMAR CO.,LTD.

Fig.19. V-BELT

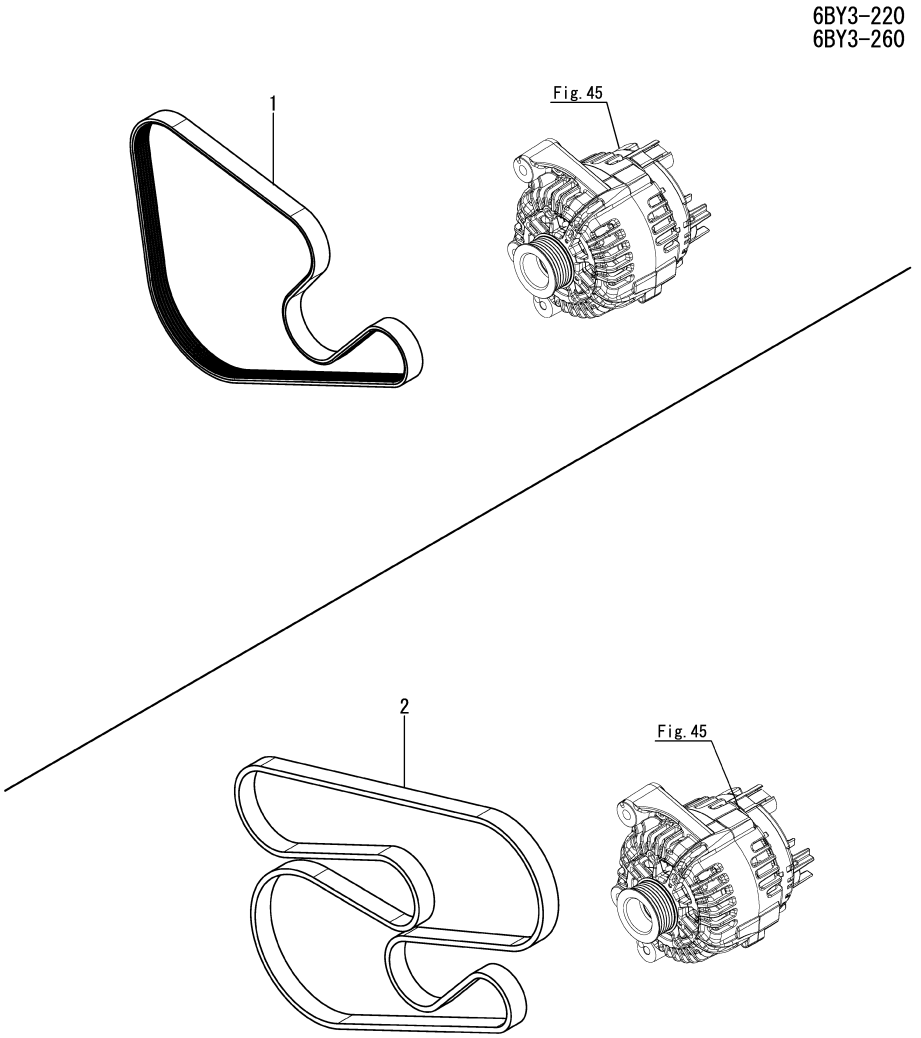

0CR10-G85600 19. V-BELT

(A)=6BY3-220
(B)=6BY3-260
(C)=6BY3-220Z
(D)=6BY3-260Z
(E)=
(F)=

REF.	LEV.	PARTS NO.	DESCRIPTION	Q'TY (A)	(B)	(C)	(D)	(E)	(F)	I	R
1	1	120640-00010	V-BELT, 6PK1230	1	1						
2	1	120640-00020	V-BELT, 6PK 2080			1	1				

N:Old $\xleftrightarrow[\text{No}]{\text{Yes}}$ New, Q:Old $\xleftrightarrow[\text{Yes}]{\text{No}}$ New, R:Old $\xleftrightarrow[\text{Yes}]{\text{Yes}}$ New, S:Old $\xleftrightarrow[\text{No}]{\text{No}}$ New, W:Add, Z:Discontinued, F:Interchangeable by set, K:Q'ty Change

(C)Copyrights YANMAR CO.,LTD.

Fig.20. TOP COVER & V-BELT COVER

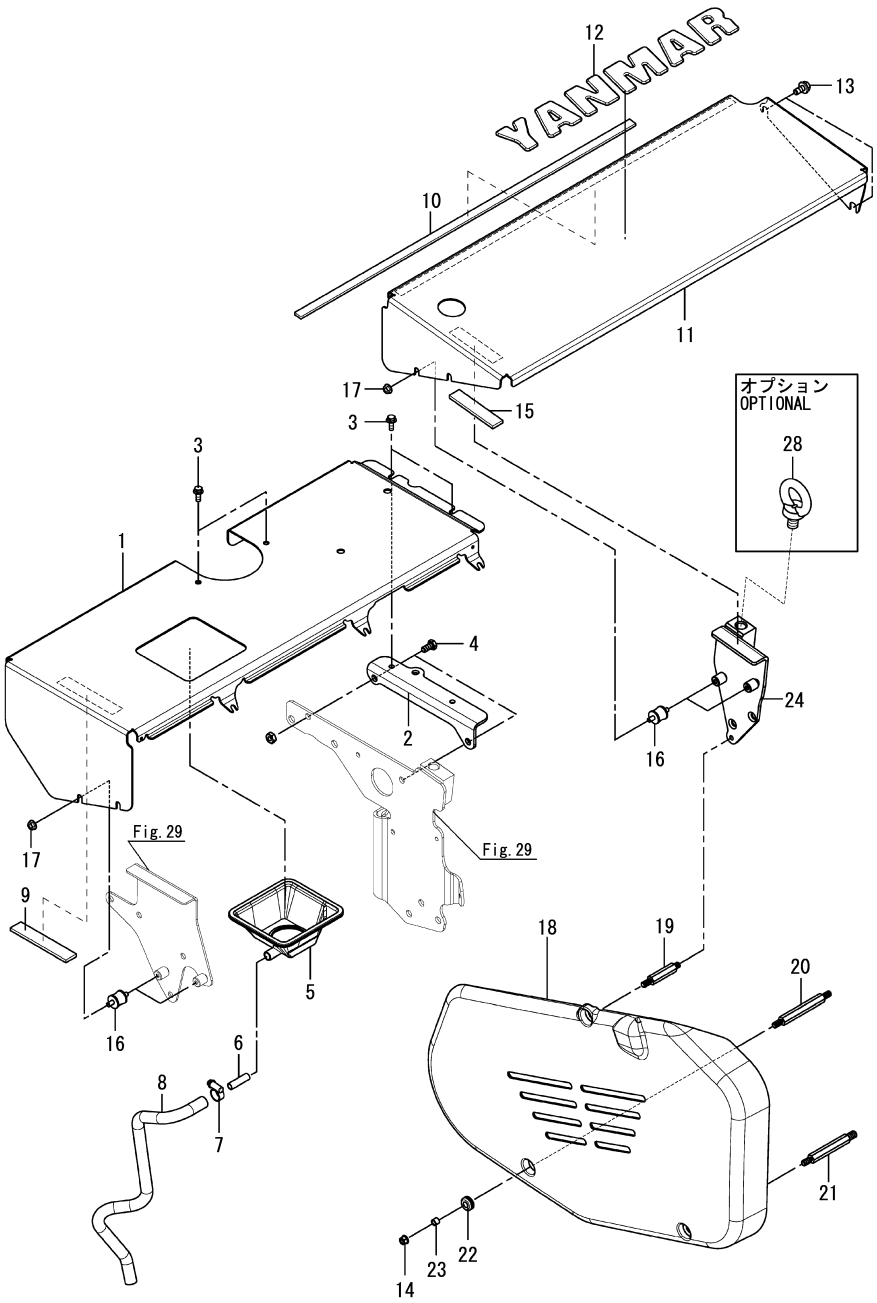

20. TOP COVER & V-BELT COVER

(A)=6BY3-220
(B)=6BY3-260
(C)=6BY3-220Z
(D)=6BY3-260Z
(E)=
(F)=

REF.	LEV.	PARTS NO.	DESCRIPTION	Q'TY (A)	(B)	(C)	(D)	(E)	(F)	I	R
1	1	120661-17000	TOP COVER, A	1	1	1	1				
2	1	120650-44270	BRACKET, TOP COVER R	1	1	1	1				
3	1	120640-02080	BOLT, M6X16-8.8	4	4	4	4				
4	1	120640-01510	SCREW, M8X16	2	2	2	2				
5	1	120661-17020	BOOT, OIL FILLER	1	1	1	1				
6	1	120650-11660	PIPE, FILLER DRAIN	1	1	1	1				
7	1	120640-01020	CLAMP, HOSE 27X9	1	1	1	1				
8	1	120650-11670	HOSE, FILLER DRAIN	1	1	1	1				
9	1	120650-17380	RUBBER SHEET A	1	1	1	1				
10	1	120660-17360	GROMMET, TOP COVER	1	1	1	1				
11	1	120661-17010	TOP COVER, B	1	1	1	1				
12	1	120650-07130	LABEL, YANMAR LOGO	1	1	1	1				
13	1	120640-01850	FLANGE BOLT, 8X16	1	1	1	1				
14	1	120640-00330	NUT, FLANGE M8	3	3	3	3				
15	1	120650-17390	RUBBER SHEET B	1	1	1	1				
16	1	120650-17410	INSULATOR, TOP COVER	4	4	4	4				
17	1	120640-00320	NUT, FLANGE M6	4	4	4	4				
18	1	120650-17170	COVER ASSY, BELT	1	1	1	1				
19	1	120650-17200	BOLT, FIXING 1	1	1	1	1				
20	1	120650-17220	BOLT, FIXING 3	1	1	1	1				
21	1	120650-17210	BOLT, FIXING 2	1	1	1	1				
22	1	128990-77610	GROMMET	3	3	3	3				
23	1	128990-77430	COLLAR	3	3	3	3				
24	1	120650-17320	BRACKET, TOP COVER F	1	1	1	1				
28	1	120650-07350	LIFTER	2	2	2	2				

N:Old ←Yes/No→ New, Q:Old ←No/Yes→ New, R:Old ←Yes/Yes→ New, S:Old ←No/No→ New, W:Add, Z:Discontinued, F:Interchangeable by set, K:Q'ty Change

(C)Copyrights YANMAR CO.,LTD.

Fig.21. LUB.OIL PUMP

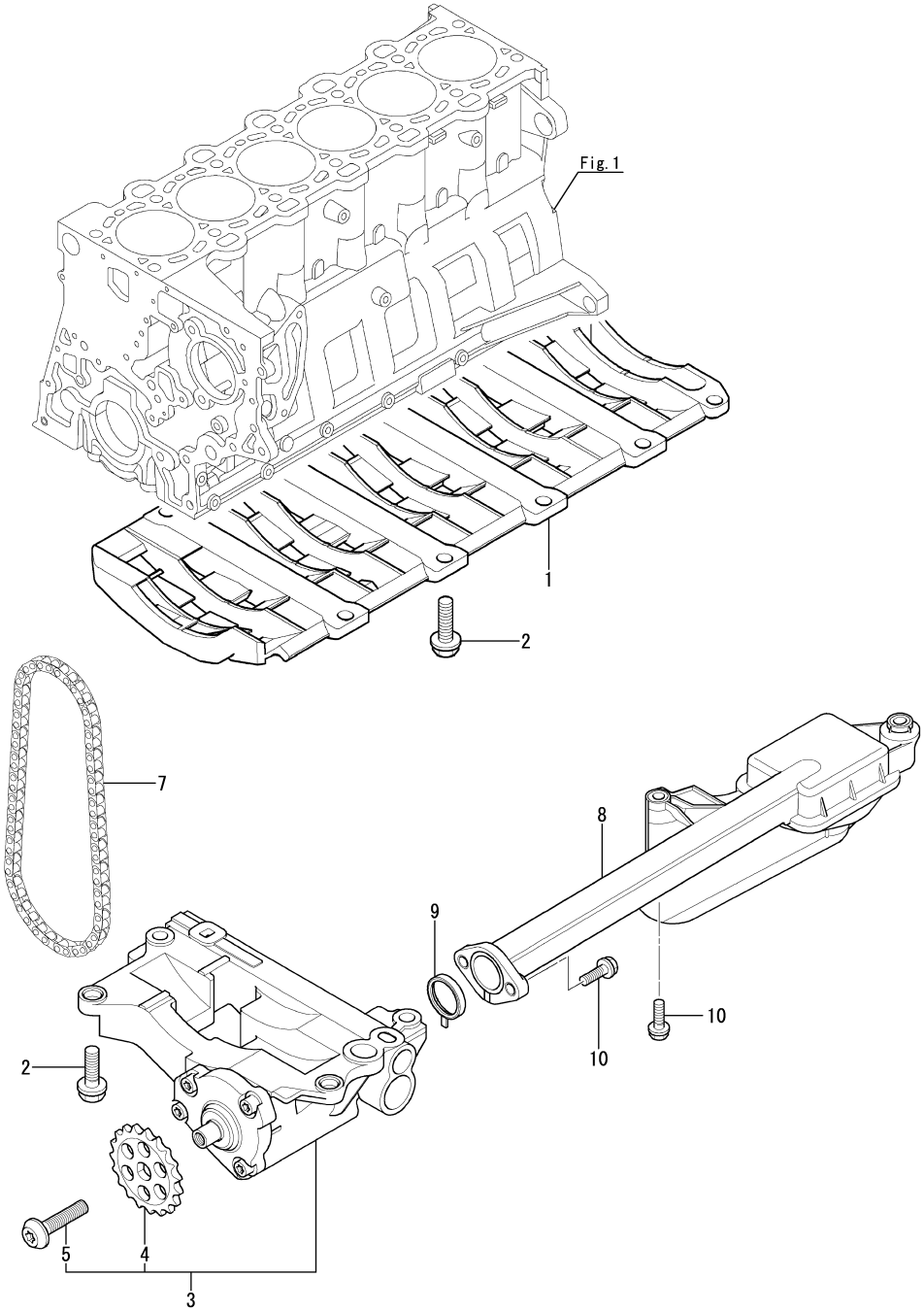

21. LUB.OIL PUMP

(A)=6BY3-220
(B)=6BY3-260
(C)=6BY3-220Z
(D)=6BY3-260Z
(E)=
(F)=

REF.	LEV.	PARTS NO.	DESCRIPTION	Q'TY (A)	(B)	(C)	(D)	(E)	(F)	I	R
1	1	165000-67810	REINFORCEMENT, BOWL	1	1	1	1				
2	1	165000-67280	BOLT, HEX M8 28	14	14	14	14				
3	1	165000-69410	PUMP, OIL	1	1	1	1				
4	2	165000-69370	SPROCKET, OIL PUMP	1	1	1	1				
5	2	165000-69390	BOLT, TORX M8X35	1	1	1	1				
7	1	165000-69400	CHAIN	1	1	1	1				
8	1	165000-93300	TUBE,SCREW	1	1	1	1				
9	1	165000-69430	GASKET, PROFILE	1	1	1	1				
10	1	165000-68320	SCREW, COLLAR M6X20	4	4	4	4				

N:Old $\frac{\text{Yes}}{\text{No}}$ New, Q:Old $\frac{\text{No}}{\text{Yes}}$ New, R:Old $\frac{\text{Yes}}{\text{Yes}}$ New, S:Old $\frac{\text{No}}{\text{No}}$ New, W:Add, Z:Discontinued, F:Interchangeable by set, K:Q'ty Change

(C)Copyrights YANMAR CO.,LTD.

Fig.22. LUB.OIL FILTER

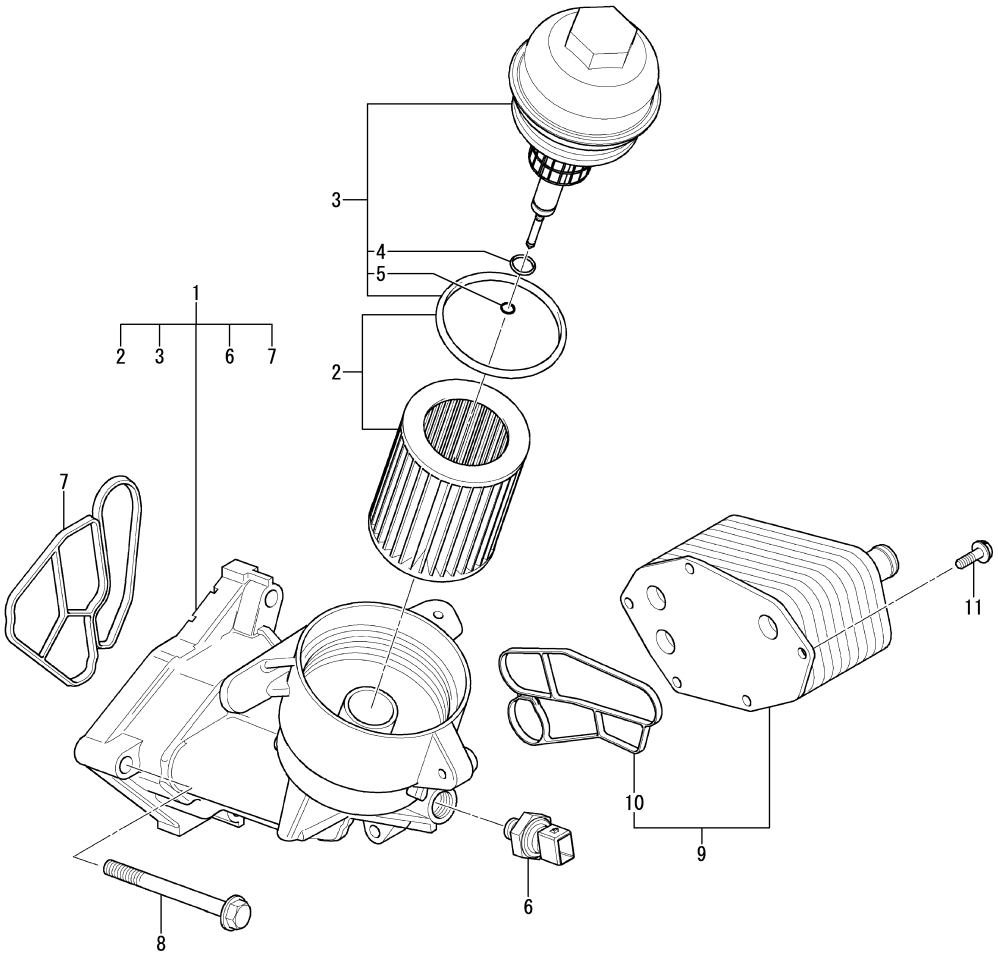

22. LUB.OIL FILTER

(A)=6BY3-220
(B)=6BY3-260
(C)=6BY3-220Z
(D)=6BY3-260Z
(E)=
(F)=

REF.	LEV.	PARTS NO.	DESCRIPTION	Q'TY (A)	(B)	(C)	(D)	(E)	(F)	I	R
1	1	165001-85220	FILTER ASSY, OIL	1	1	1	1				
2	2	165000-69590	ELEMENT, OIL FILTER	1	1	1	1				
3	2	165000-69630	COVER, OIL FILTER	1	1	1	1				
4	3	165000-69570	O-RING, 21.0 3.0	1	1	1	1				
5	3	165000-69580	O-RING, 8.80 2.67	1	1	1	1				
6	2	165001-35740	SWITCH, OIL PRESSURE	1	1	1	1				
7	2	165000-69560	GASKET, PROFILE	1	1	1	1				
8	1	165001-46290	BOLT, HEX M8X45	3	3	3	3				
9	1	165000-69600	EXCHANGER, HEAT	1	1	1	1				
10	2	165000-69610	GASKET, PROFILE	1	1	1	1				
11	1	165000-69620	BOLT, TORX M6X20	6	6	6	6				

N:Old $\xleftrightarrow[\text{No}]{\text{Yes}}$ New, Q:Old $\xleftrightarrow[\text{Yes}]{\text{No}}$ New, R:Old $\xleftrightarrow[\text{Yes}]{\text{Yes}}$ New, S:Old $\xleftrightarrow[\text{No}]{\text{No}}$ New, W:Add, Z:Discontinued, F:Interchangeable by set, K:Q'ty Change

(C)Copyrights YANMAR CO.,LTD.

Fig.23. ROTARY PUMP(OPTION)

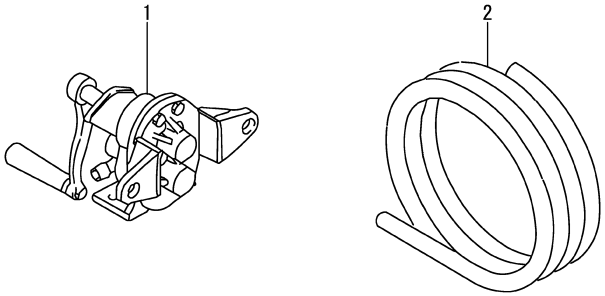

0CR10-G85600

23. ROTARY PUMP(OPTION)

(A)=6BY3-220
(B)=6BY3-260
(C)=6BY3-220Z
(D)=6BY3-260Z
(E)=
(F)=

REF.	LEV.	PARTS NO.	DESCRIPTION	Q'TY (A)	(B)	(C)	(D)	(E)	(F)	I	R
1	1	124413-39100	PUMP ASSY	1	1	1	1				
2	1	120130-39990	HOSE,OIL DRAIN 3M	1	1	1	1				

N:Old $\xleftarrow[\text{No}]{\text{Yes}}$ New, Q:Old $\xleftarrow[\text{Yes}]{\text{No}}$ New, R:Old $\xleftarrow[\text{Yes}]{\text{Yes}}$ New, S:Old $\xleftarrow[\text{No}]{\text{No}}$ New, W:Add, Z:Discontinued, F:Interchangeable by set, K:Q'ty Change

(C)Copyrights YANMAR CO.,LTD.

Fig.24. LUB.OIL PIPE(TURBOCHARGER)

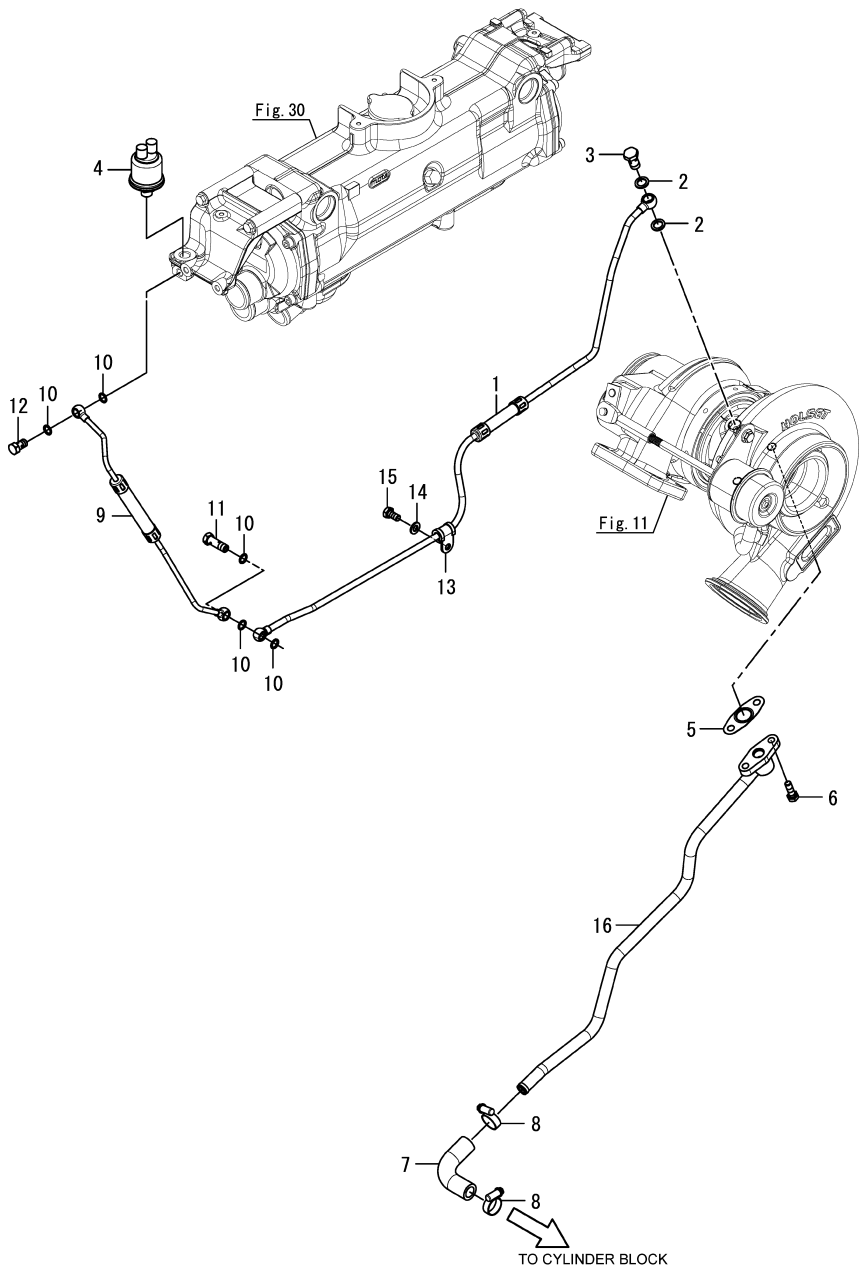

24. LUB.OIL PIPE(TURBOCHARGER)

(A)=6BY3-220
(B)=6BY3-260
(C)=6BY3-220Z
(D)=6BY3-260Z
(E)=
(F)=

REF.	LEV.	PARTS NO.	DESCRIPTION	Q'TY (A)	(B)	(C)	(D)	(E)	(F)	I	R
1	1	120661-39350	PIPE, OIL TURBO IN	1	1	1	1				
2	1	120640-00290	RING, SEALING A30X36	2	2	2	2				
3	1	120640-01430	SCREW, HOLLOW	1	1	1	1				
4	1	120650-39270	SENSOR, OIL PRESSURE	1	1	1	1				
5	1	120660-39310	GASKET, OIL RETURN	1	1	1	1				
6	1	120640-01580	SCREW, M8X25	2	2	2	2				
7	1	120650-39250	HOSE, TURBO RETURN	1	1	1	1				
8	1	120640-01020	CLAMP, HOSE 27X9	2	2	2	2				
9	1	120651-39350	PIPE, OIL SENSOR	1	1	1	1				
10	1	120640-01210	RING, SEALING	5	5	5	5				
11	1	120650-39290	SCREW, HOLLOW	1	1	1	1				
12	1	120640-01410	SCREW, HOLLOW	1	1	1	1				
13	1	120650-85410	CLAMP, PIPE	1	1	1	1				
14	1	120640-02230	WASHER	1	1	1	1				
15	1	120640-01510	SCREW, M8X16	1	1	1	1				
16	1	120661-39200	PIPE, OIL TURBO OUT	1	1	1	1				

N:Old $\frac{\text{Yes}}{\text{No}}$ New, Q:Old $\frac{\text{No}}{\text{Yes}}$ New, R:Old $\frac{\text{Yes}}{\text{Yes}}$ New, S:Old $\frac{\text{No}}{\text{No}}$ New, W:Add, Z:Discontinued, F:Interchangeable by set, K:Q'ty Change

(C)Copyrights YANMAR CO.,LTD.

Fig.25. AIR COOLER

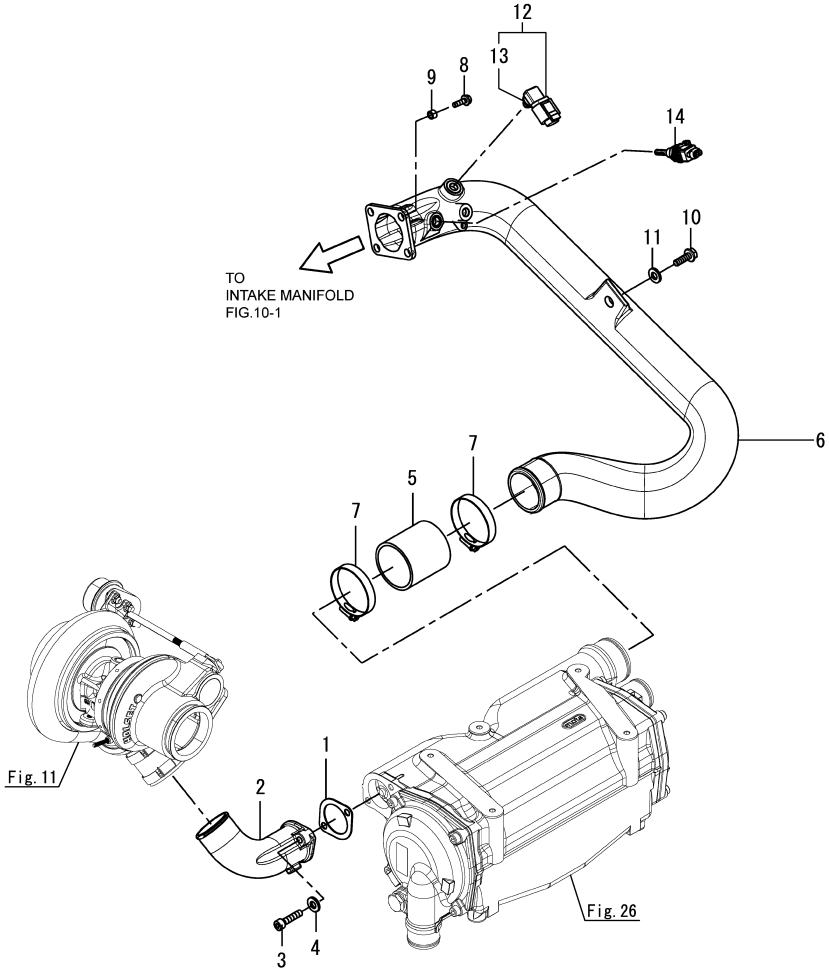

25. AIR COOLER

(A)=6BY3-220
(B)=6BY3-260
(C)=6BY3-220Z
(D)=6BY3-260Z
(E)=
(F)=

REF.	LEV.	PARTS NO.	DESCRIPTION	Q'TY (A)	(B)	(C)	(D)	(E)	(F)	I	R
1	1	120650-18850	GASKET, AIR CAC IN	1	1	1	1				
2	1	120660-18820	DUCT, AIR	1	1	1	1				
3	1	120640-01540	SCREW, M8X35	2	2	2	2				
4	1	120640-02230	WASHER	2	2	2	2				
5	1	120650-18910	HOSE, CAC OUT	1	1	1	1				
6	1	120650-18830	AIR DUCT, CAC OUT	1	1	1	1				
7	1	120640-01050	CLAMP, HOSE 80X13	2	2	2	2				
8	1	120640-01590	SCREW, M6X25	4	4	4	4				
9	1	120640-02220	WASHER	4	4	4	4				
10	1	120640-01540	SCREW, M8X35	1	1	1	1				
11	1	120640-02230	WASHER	1	1	1	1				
12	1	120640-00140	SENSOR, BOOST P	1	1	1	1				
13	2	120640-00450	GROMMET,BOOST SENSOR	1	1	1	1				
14	1	120640-00130	SENSOR, AIR TEMP	1	1	1	1				

N:Old $\xleftrightarrow[\text{No}]{\text{Yes}}$ New, Q:Old $\xleftrightarrow[\text{Yes}]{\text{No}}$ New, R:Old $\xleftrightarrow[\text{Yes}]{\text{Yes}}$ New, S:Old $\xleftrightarrow[\text{No}]{\text{No}}$ New, W:Add, Z:Discontinued, F:Interchangeable by set, K:Q'ty Change

(C)Copyrights YANMAR CO.,LTD.

Fig.26. AIR COOLER(INNER PARTS)

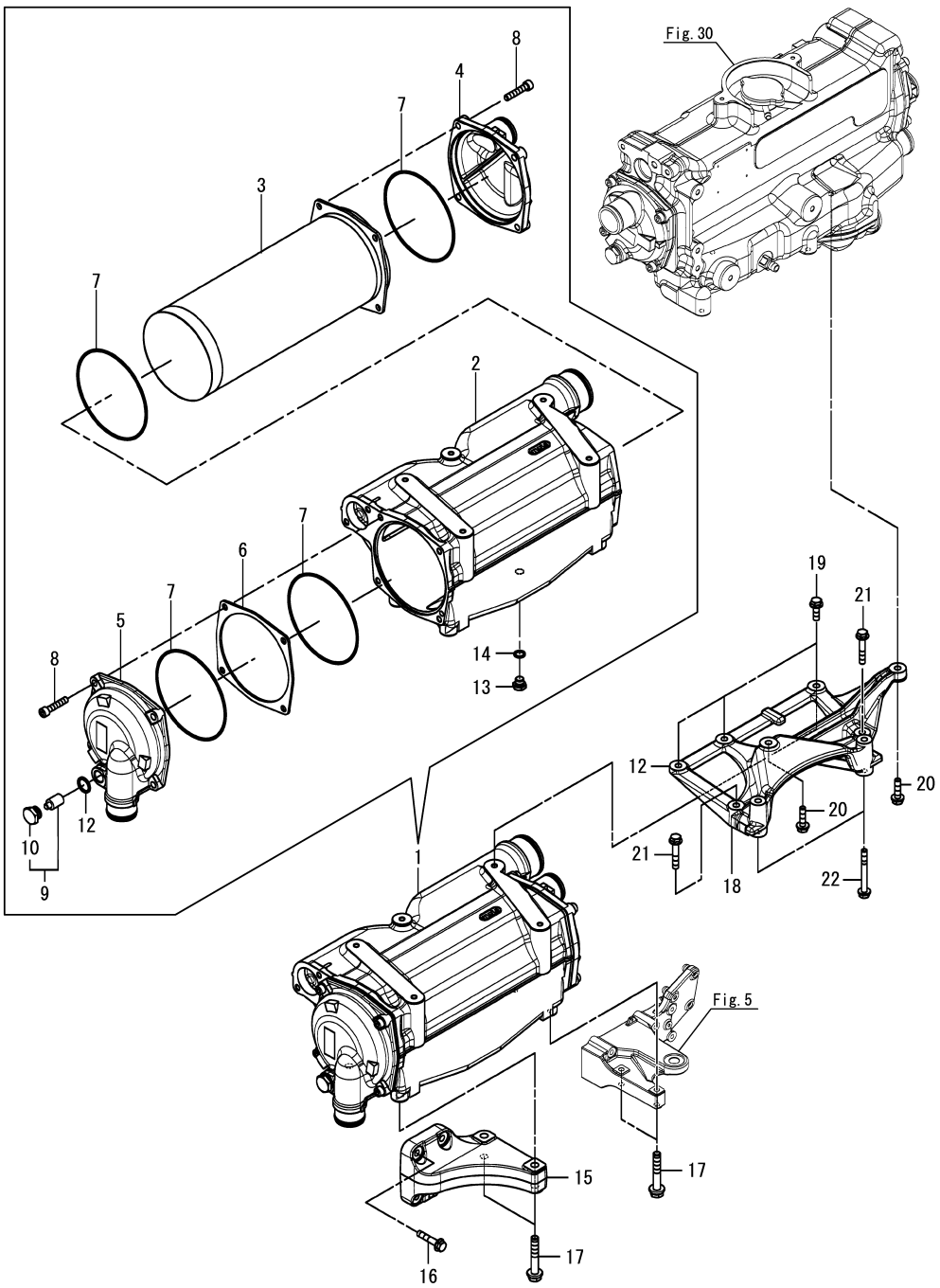

26. AIR COOLER(INNER PARTS)

(A)=6BY3-220
(B)=6BY3-260
(C)=6BY3-220Z
(D)=6BY3-260Z
(E)=
(F)=

REF.	LEV.	PARTS NO.	DESCRIPTION	Q'TY (A)	(B)	(C)	(D)	(E)	(F)	I	R
1	1	120661-18400	COOLER ASSY, AIR	1	1	1	1				
2	2	120661-18410	HOUSING, CAC 6BY	1	1	1	1				
3	2	120660-18420	TUBE STACK, 6BY	1	1	1	1				
4	2	120650-18430	COVER, CAC REAR	1	1	1	1				
5	2	120650-18440	COVER, CAC FRONT	1	1	1	1				
6	2	120650-18450	SPACER, CAC	1	1	1	1				
7	2	120650-18470	O-RING, CAC	4	4	4	4				
8	2	120650-18480	BOLT, M8X40	8	8	8	8				
9	2	120650-18490	ZINC	1	1	1	1				
10	3	120650-18530	PLIG(ZINC ANODE	1	1	1	1				
12	2	120650-18500	GASKET, CUPPER	1	1	1	1				
13	2	120650-18510	PLUG, DRAIN	1	1	1	1				
14	2	120650-18520	GASKET, CUPPER	1	1	1	1				
15	1	120660-18460	BRACKET, CAC REAR	1	1	1	1				
16	1	120640-01870	BOLT, M8X40-8.8	4	4	4	4				
17	1	120640-01990	BOLT, M10X60-8.8	4	4	4	4				
18	1	120660-44400	BRACKET, HEAT EXCHAN	1	1	1	1				
19	1	120640-02150	FLANGE BOLT, 8X25	3	3	3	3				
20	1	120640-01860	BOLT, M8X30-10.9	2	2	2	2				
21	1	120640-02160	FLANGE BOLT, 8X45	2	2	2	2				
22	1	120640-01920	BOLT, M8X70-10.9	2	2	2	2				

N:Old $\frac{\text{Yes}}{\text{No}}$ New, Q:Old $\frac{\text{No}}{\text{Yes}}$ New, R:Old $\frac{\text{Yes}}{\text{Yes}}$ New, S:Old $\frac{\text{No}}{\text{No}}$ New, W:Add, Z:Discontinued, F:Interchangeable by set, K:Q'ty Change

(C)Copyrights YANMAR CO.,LTD.

Fig.27. WATER PUMP

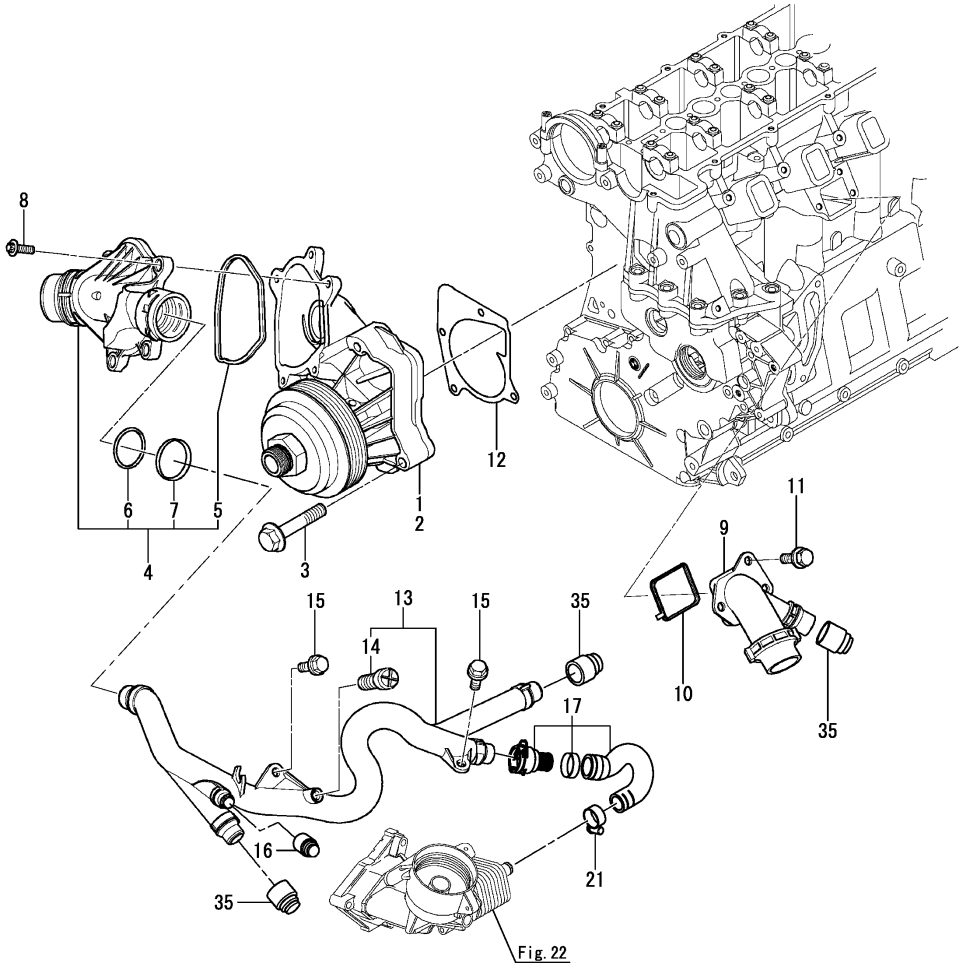

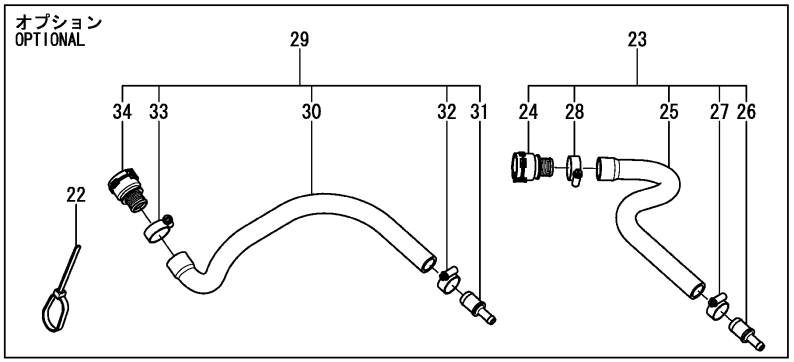

27. WATER PUMP

(A)=6BY3-220
(B)=6BY3-260
(C)=6BY3-220Z
(D)=6BY3-260Z
(E)=
(F)=

REF.	LEV.	PARTS NO.	DESCRIPTION	Q'TY (A)	(B)	(C)	(D)	(E)	(F)	I	R
1	1	165001-35870	WATER PUMP	1	1	1	1				
2	1	165001-22380	PUMP, WATER	1	1	1	1				
3	1	165000-69690	SCREW, TORX M7X38	4	4	4	4				
4	1	165001-44440	THERMOSTAT ASSY	1	1	1	1				
5	2	165000-69650	GASKET, PROFILE	1	1	1	1				
6	2	165000-69660	O-RING	1	1	1	1				
7	2	165000-69670	RING, BACKUP	1	1	1	1				
8	1	165000-67240	BOLT,HEX M6X20	4	4	4	4				
9	1	165001-35800	CONNECTOR	1	1	1	1				
10	1	165000-67960	GASKET, PROFILE	1	1	1	1				
11	1	165001-43540	BOLT, HEX M6 25	3	3	3	3				
12	1	165001-44450	GASKET, STEEL	1	1	1	1				
13	1	165001-35730	PIPE, RETURN	1	1	1	1				
14	2	165000-69780	SCREW, VENT	1	1	1	1				
15	1	165001-59980	SCREW, COLLAR M6X18	2	2	2	2				
16	1	120650-49380	COUPLING, QUICK	1	1	1	1				
17	1	120650-49400	HOSE, OIL COOLER	1	1	1	1				
21	1	120640-01020	CLAMP, HOSE 27X9	1	1	1	1				
22	1	120640-09130	TIE,STRAP 550	1	1	1	1				
23	1	120650-49851	HOSE ASSY, HEATER SU	1	1	1	1				
24	2	120650-49310	COUPLING, RAPID	1	1	1	1				
25	2	120650-49811	HOSE, HOT WATER OUT	1	1	1	1				
26	2	120650-49830	HOSE,RESTRICTOR	1	1	1	1				
27	2	23000-028000	CLAMP, HOSE	1	1	1	1				
28	2	129670-49500	CLIP	1	1	1	1				
29	1	120650-49861	HOSE ASSY, HEATER RE	1	1	1	1				
30	2	120650-49821	HOSE, HOT WATER RETU	1	1	1	1				
31	2	120650-49830	HOSE,RESTRICTOR	1	1	1	1				
32	2	23000-028000	CLAMP, HOSE	1	1	1	1				
33	2	129670-49500	CLIP	1	1	1	1				
34	2	120650-49310	COUPLING, RAPID	1	1	1	1				
35	1	120650-49390	COUPLING, QUICK	3	3	3	3				

N:Old $\frac{\text{Yes}}{\text{No}}$ New, Q:Old $\frac{\text{No}}{\text{Yes}}$ New, R:Old $\frac{\text{Yes}}{\text{Yes}}$ New, S:Old $\frac{\text{No}}{\text{No}}$ New, W:Add, Z:Discontinued, F:Interchangeable by set, K:Q'ty Change

(C)Copyrights YANMAR CO.,LTD.

Fig.28. COOLING SEA WATER PUMP

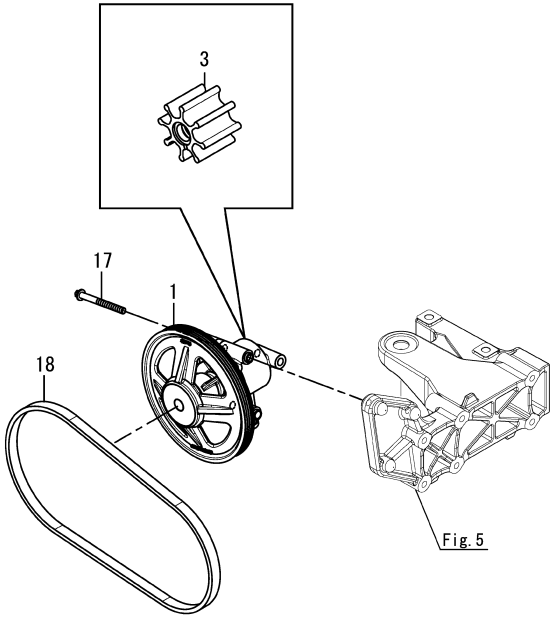

0CR10-G85600

28. COOLING SEA WATER PUMP

(A)=6BY3-220
(B)=6BY3-260
(C)=6BY3-220Z
(D)=6BY3-260Z
(E)=
(F)=

REF.	LEV.	PARTS NO.	DESCRIPTION	Q'TY (A)	(B)	(C)	(D)	(E)	(F)	I	R
1	1	120650-42300	PUMP ASSY,SEAWATER	1	1	1	1				
3	2	120650-42310	IMPELLER	1	1	1	1				
17	1	120640-01550	SCREW, M8X80	3	3	3	3				
18	1	120650-42360	V-BELT, 4PK 964	1	1	1	1				

N:Old $\xleftrightarrow[\text{No}]{\text{Yes}}$ New, Q:Old $\xleftrightarrow[\text{Yes}]{\text{No}}$ New, R:Old $\xleftrightarrow[\text{Yes}]{\text{Yes}}$ New, S:Old $\xleftrightarrow[\text{No}]{\text{No}}$ New, W:Add, Z:Discontinued, F:Interchangeable by set, K:Q'ty Change

(C)Copyrights YANMAR CO.,LTD.

Fig.29. HEAT EXCHANGER

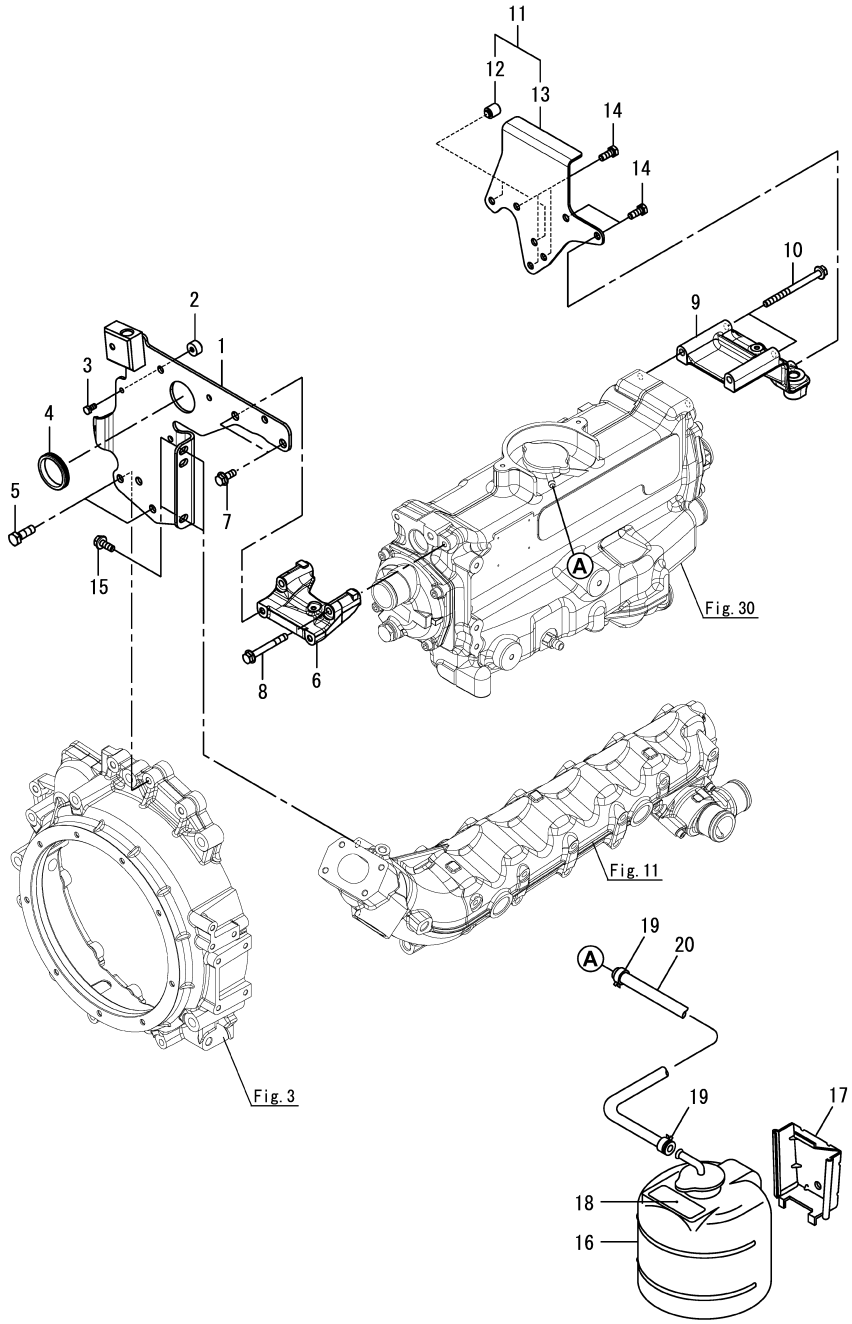

0CR10-G85600 29. HEAT EXCHANGER

(A)=6BY3-220
(B)=6BY3-260
(C)=6BY3-220Z
(D)=6BY3-260Z
(E)=
(F)=

REF.	LEV.	PARTS NO.	DESCRIPTION	Q'TY (A)	(B)	(C)	(D)	(E)	(F)	I	R
1	1	120650-44150	BRACKET, H/E REAR	1	1	1	1				
2	1	120650-11440	SPACER, BRACKET REAR	1	1	1	1				
3	1	120640-01460	SCREW, M6X12	1	1	1	1				
4	1	120650-44220	SLEEVE, PROTECTING	1	1	1	1				
5	1	120640-01960	BOLT, M10X30-8.8	2	2	2	2				
6	1	120650-44180	SPACER, ELEMENT REAR	1	1	1	1				
7	1	120640-02140	FLANGE BOLT, M8X20	2	2	2	2				
8	1	120640-01910	BOLT, M8X65-8.8	2	2	2	2				
9	1	120660-44210	SPACER,ELEMENT FRONT	1	1	1	1				
10	1	120640-01940	BOLT, M8X100-8.8	2	2	2	2				
11	1	120651-44190	BRACKET, H/E FRO	1	1	1	1				
12	2	120650-44230	BRACKET, H/E FRO	1	1	1	1				
13	2	120650-17370	SPACER	2	2	2	2				
14	1	120640-01520	SCREW, M8X20	5	5	5	5				
15	1	120640-01880	BOLT, M8X50-10.9	2	2	2	2				
16	1	128397-44500	TANK ASSY	1	1	1	1				
17	1	128397-44510	BRACKET	1	1	1	1				
18	1	129670-44570	LABEL, SUB-TANK	1	1	1	1				
19	1	23010-013000	CLAMP 13	2	2	2	2				
20	1	129270-44501	PIPE,OVER FLOW	1	1	1	1				

N:Old $\frac{\text{Yes}}{\text{No}}$ New, Q:Old $\frac{\text{No}}{\text{Yes}}$ New, R:Old $\frac{\text{Yes}}{\text{Yes}}$ New, S:Old $\frac{\text{No}}{\text{No}}$ New, W:Add, Z:Discontinued, F:Interchangeable by set, K:Q'ty Change

(C)Copyrights YANMAR CO.,LTD.

Fig.30. HEAT EXCHANGER(INNER PARTS)

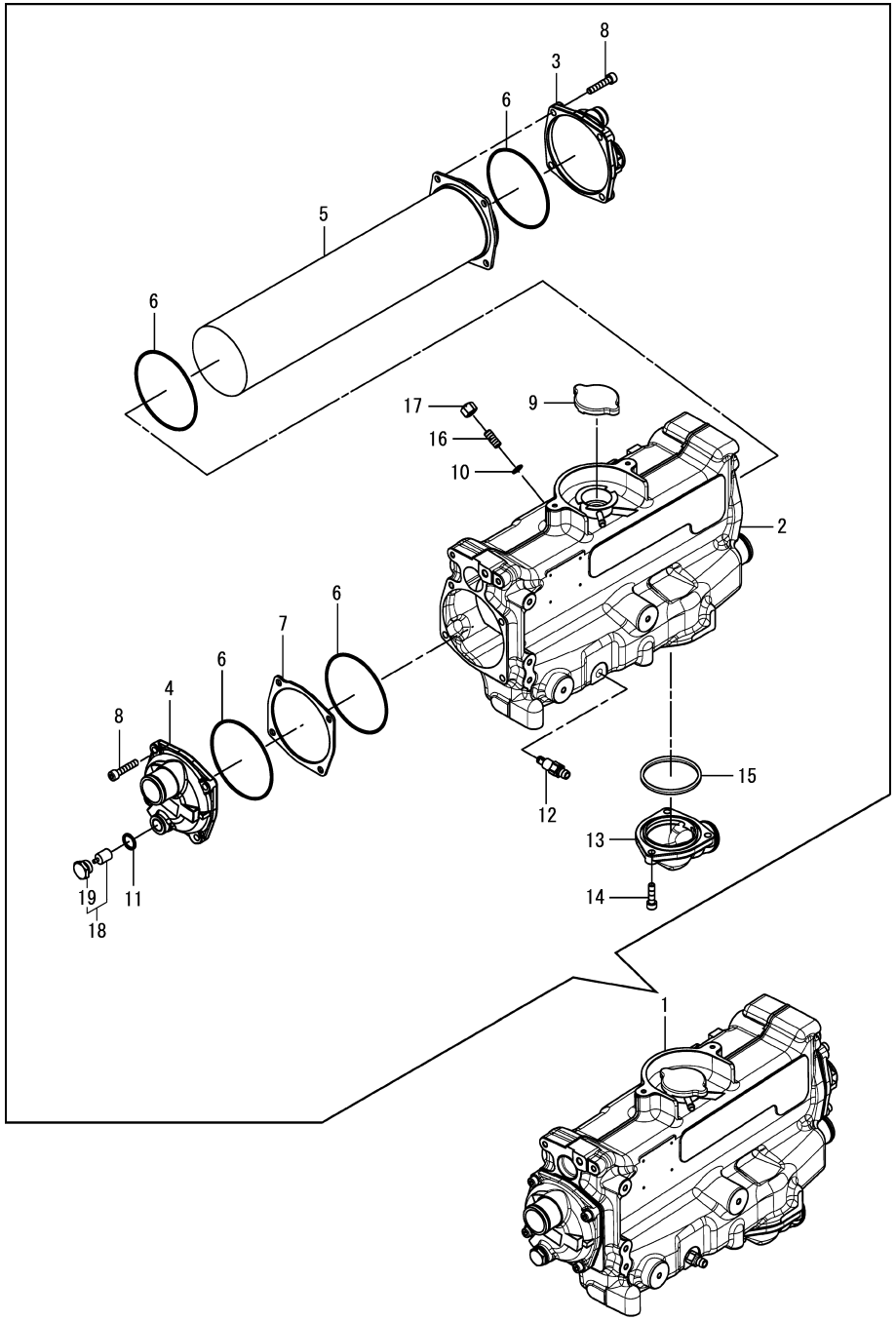

30. HEAT EXCHANGER(INNER PARTS)

(A)=6BY3-220
(B)=6BY3-260
(C)=6BY3-220Z
(D)=6BY3-260Z
(E)=
(F)=

REF.	LEV.	PARTS NO.	DESCRIPTION	Q'TY (A)	(B)	(C)	(D)	(E)	(F)	I	R
1	1	120661-44000	HEAT EXCHANGER ASSY	1	1	1	1				
2	2	120661-44010	HOUSING, H/E	1	1	1	1				
3	2	120650-44030	COVER, HEX REAR	1	1	1	1				
4	2	120650-44040	COVER, HEX FRONT	1	1	1	1				
5	2	120660-44020	CORE, HEX 6BY	1	1	1	1				
6	2	120650-44070	O-RING, HEX	4	4	4	4				
7	2	120650-44050	SPACER, HEX	1	1	1	1				
8	2	120650-18480	BOLT, M8X40	8	8	8	8				
9	2	120650-44090	CAP, FILLER	1	1	1	1				
10	2	120661-44540	GASKET,10X1	1	1	1	1				
11	2	120650-18500	GASKET, CUPPER	1	1	1	1				
12	2	120650-49610	PLUG, DRAIN	1	1	1	1				
13	2	120651-44500	BEND, H/E	1	1	1	1				
14	2	120651-44510	BOLT, 8X30	3	3	3	3				
15	2	120651-44520	O-RING, THERMOSTAT	1	1	1	1				
16	2	120661-44560	BOLT, M10X25	1	1	1	1				
17	2	120661-44550	NUT,10	1	1	1	1				
18	2	120650-18490	ZINC	1	1	1	1				
19	3	120650-18530	PLIG(ZINC ANODE	1	1	1	1				

N:Old $\xleftrightarrow[\text{No}]{\text{Yes}}$ New, Q:Old $\xleftrightarrow[\text{Yes}]{\text{No}}$ New, R:Old $\xleftrightarrow[\text{Yes}]{\text{Yes}}$ New, S:Old $\xleftrightarrow[\text{No}]{\text{No}}$ New, W:Add, Z:Discontinued, F:Interchangeable by set, K:Q'ty Change

(C)Copyrights YANMAR CO.,LTD.

Fig.31. HOSE, FW PUMP

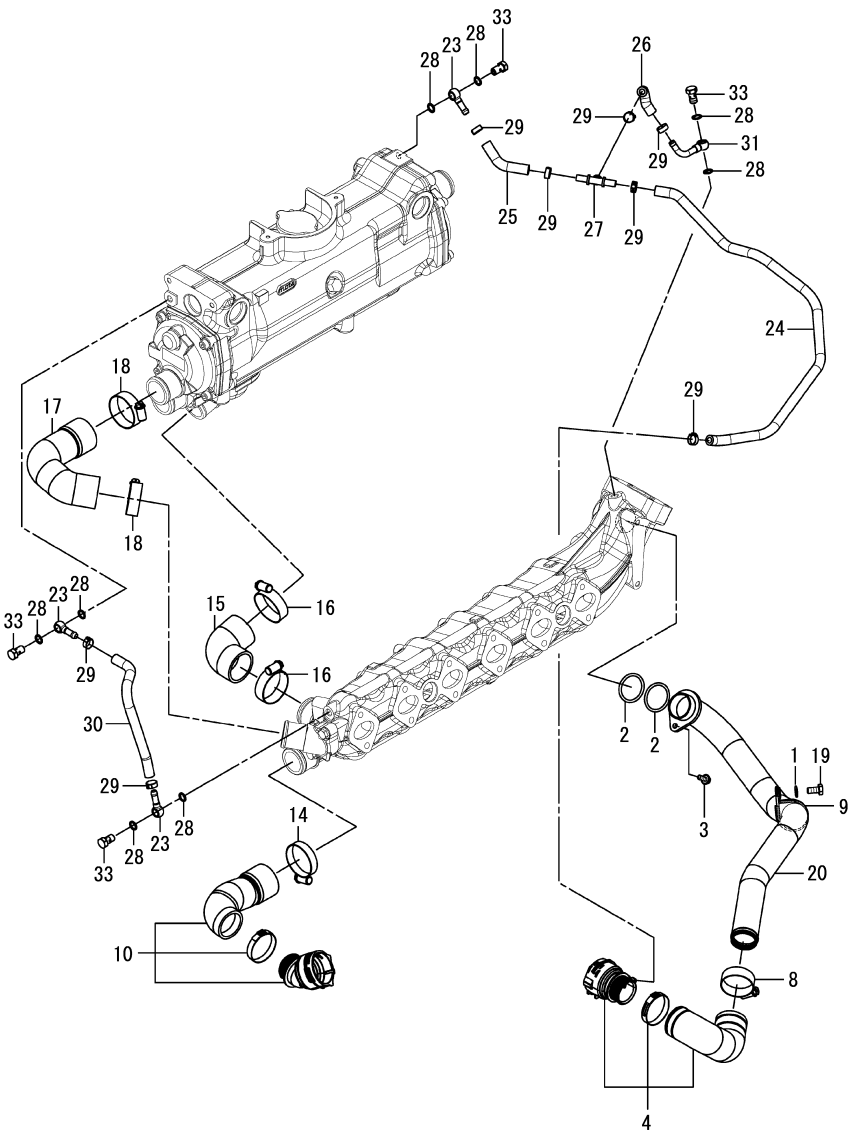

31. HOSE, FW PUMP

(A)=6BY3-220
(B)=6BY3-260
(C)=6BY3-220Z
(D)=6BY3-260Z
(E)=
(F)=

REF.	LEV.	PARTS NO.	DESCRIPTION	Q'TY (A)	(B)	(C)	(D)	(E)	(F)	I	R
1	1	120640-02230	WASHER	1	1	1	1				
2	1	120650-49260	O-RING, 36X3.53	2	2	2	2				
3	1	120640-02080	BOLT, M6X16-8.8	1	1	1	1				
4	1	120650-49200	HOSE ASSY, HEAD OUT	1	1	1	1				
8	1	120650-49710	CLAMP, HOSE	1	1	1	1				
9	1	120650-49650	CLAMP, PIPE	1	1	1	1				
10	1	120661-49100	HOSE ASSY, ENGINE IN	1	1	1	1				
14	1	120650-49710	CLAMP, HOSE	1	1	1	1				
15	1	120651-44350	HOSE, H/E-THERMO	1	1	1	1				
16	1	120650-49710	CLAMP, HOSE	2	2	2	2				
17	1	120660-44530	HOSE, MANIFOLD-H/E	1	1	1	1				
18	1	120650-49710	CLAMP, HOSE	2	2	2	2				
19	1	120640-01510	SCREW, M8X16	1	1	1	1				
20	1	120661-49250	PIPE ASSY, HEAD OUT	1	1	1	1				
23	1	120650-49350	NIPPLE, HOSE	3	3	3	3				
24	1	120661-49330	HOSE, AIR BLEEDING	1	1	1	1				
25	1	120650-49450	HOSE,AIR BLEEDING	1	1	1	1				
26	1	120660-49430	HOSE,AIR BLEEDING RE	1	1	1	1				
27	1	120650-49460	JOINT,AIR BLEEDING T	1	1	1	1				
28	1	120640-01210	RING, SEALING	8	8	8	8				
29	1	120650-55850	CLAMP, HOSE1EAR14.0	8	8	8	8				
30	1	120650-49440	HOSE,AIR BLEEDING	1	1	1	1				
31	1	120651-49420	PIPE, AIR BLEEDING	1	1	1	1				
33	1	120640-01410	SCREW, HOLLOW	4	4	4	4				

N:Old $\xleftrightarrow[\text{No}]{\text{Yes}}$ New, Q:Old $\xleftrightarrow[\text{Yes}]{\text{No}}$ New, R:Old $\xleftrightarrow[\text{Yes}]{\text{Yes}}$ New, S:Old $\xleftrightarrow[\text{No}]{\text{No}}$ New, W:Add, Z:Discontinued, F:Interchangeable by set, K:Q'ty Change

(C)Copyrights YANMAR CO.,LTD.

Fig.32. C.S.W.PIPE & COUPLING(ZT SPEC)

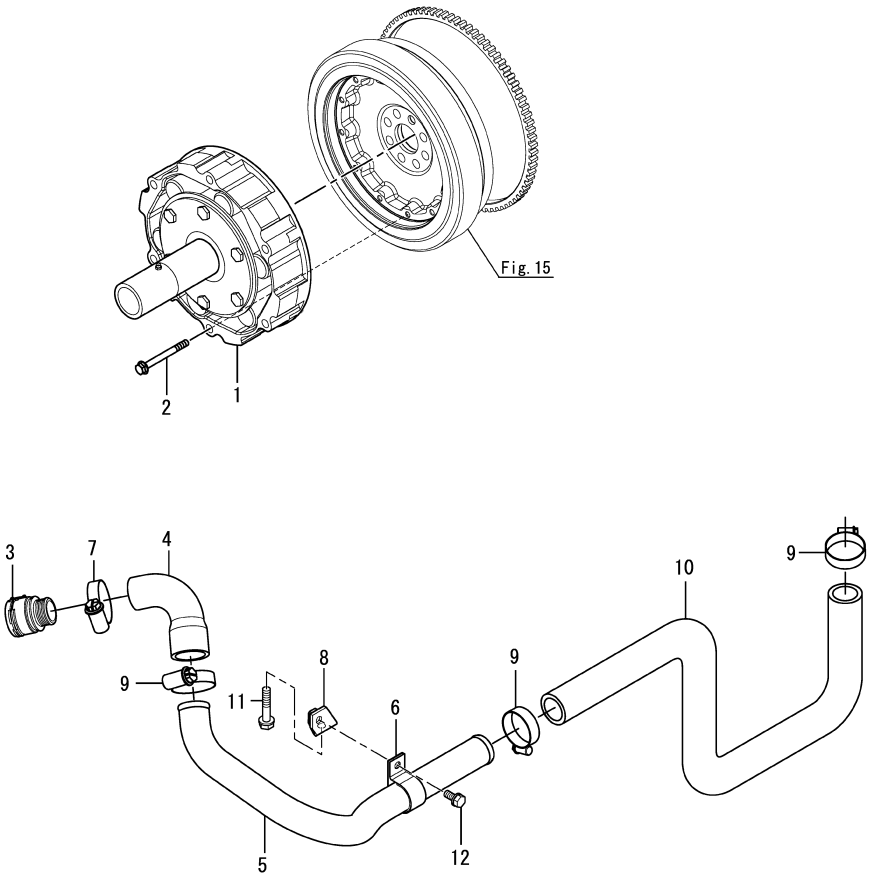

0CR10-G85600

32. C.S.W.PIPE & COUPLING(ZT SPEC)

(A)=6BY3-220
(B)=6BY3-260
(C)=6BY3-220Z
(D)=6BY3-260Z
(E)=
(F)=

REF.	LEV.	PARTS NO.	DESCRIPTION	Q'TY (A)	(B)	(C)	(D)	(E)	(F)	I	R
1	1	120661-81050	COUPLING CF-RSD-106			1	1				
2	1	26106-080602	BOLT			6	6				
3	1	120650-42630	JOINT			1	1				
4	1	119779-49190	HOSE, DRIVE OUT			1	1				
5	1	119779-49200	CW-T(DRIVE-SWP			1	1				
6	1	119779-49210	CLAMP(CW-T			1	1				
7	1	120650-49710	CLAMP, HOSE			1	1				
8	1	120651-49710	BRACKET(CW-T			1	1				
9	1	120650-49720	CLAMP, HOSE			3	3				
10	1	119779-49900	HOSE,SEA WATER 2M			1	1				
11	1	26106-100652	BOLT			1	1				
12	1	26106-100162	BOLT			1	1				

N:Old $\overset{\text{Yes}}{\underset{\text{No}}{\leftrightarrows}}$ New, Q:Old $\overset{\text{No}}{\underset{\text{Yes}}{\leftrightarrows}}$ New, R:Old $\overset{\text{Yes}}{\underset{\text{Yes}}{\leftrightarrows}}$ New, S:Old $\overset{\text{No}}{\underset{\text{No}}{\leftrightarrows}}$ New, W:Add, Z:Discontinued, F:Interchangeable by set, K:Q'ty Change

(C)Copyrights YANMAR CO.,LTD.

Fig.33. MIXING ELBOW

6BY3-220Z
6BY3-260Z

SDハイライザー
SD HIGH RISER

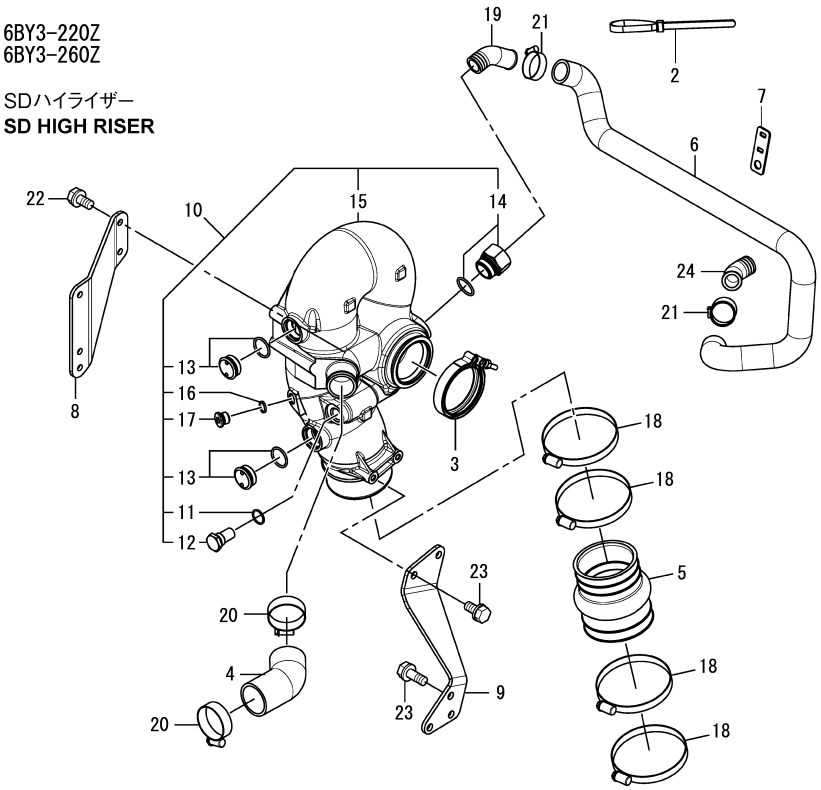

6BY3-220
6BY3-260

Lタイプ
L TYPE

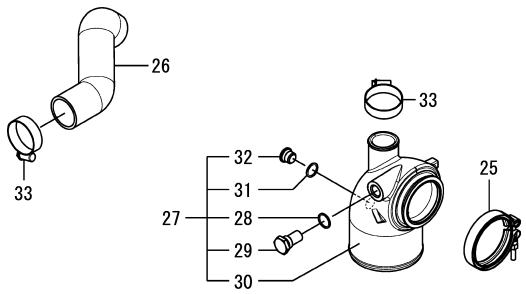

Remarks
(1)Not illustrated.

33. MIXING ELBOW

(A)=6BY3-220
(B)=6BY3-260
(C)=6BY3-220Z
(D)=6BY3-260Z
(E)=
(F)=

REF.	LEV.	PARTS NO.	DESCRIPTION	Q'TY (A)	(B)	(C)	(D)	(E)	(F)	I	R
1	1	120640-00390	NUT, ISO7/16			1	1				1
2	1	120640-09130	TIE,STRAP 550			1	1				
3	1	120650-13450	V-CLAMP, TURBINE OUT			1	1				
4	1	120660-13510	HOSE, MIXING DRIVE			1	1				
5	1	120650-13520	JOINT, RUBBER			1	1				
6	1	120660-13810	HOSE, BYPASS			1	1				
7	1	120660-13820	SHEET, RETAINING			1	1				
8	1	120660-13881	BRACKET A, MIXING DR			1	1				
9	1	120660-13891	BRACKET B, MIXING DR			1	1				
10	1	120650-13901	ELBOW ASY, MIXING DR			1	1				
11	2	120640-01270	RING, SEALING A18X22			1	1				
12	2	120650-13420	ZINC, ANTI-CORROSIVE			1	1				
13	2	120650-13430	PLUG, M30X1.5			2	2				
14	2	120660-13470	ADAPTOR, BYPASS			1	1				
15	2	120650-13911	ELBOW, MIXING DRIVE			1	1				
16	2	23414-130000	GASKET			1	1				
17	2	23893-020002	PLUG			1	1				
18	1	119172-48010	CLIP, HOSE			4	4				
19	1	119175-49550	JOINT			1	1				
20	1	120650-49720	CLAMP, HOSE			2	2				
21	1	120650-49750	CLAMP, HOSE			2	2				
22	1	26106-080202	BOLT			5	5				
23	1	26106-080202	BOLT			5	5				
24	1	119175-49550	JOINT			1	1				
25	1	120650-13450	V-CLAMP, TURBINE OUT	1	1						
26	1	120650-13870	HOSE	1	1						
27	1	120650-13930	MIXING ELBOW	1	1						
28	2	120640-01270	RING, SEALING A18X22	1	1						
29	2	120650-13420	ZINC, ANTI-CORROSIVE	1	1						
30	2	120650-13940	ELBOW, MIXING L TYPE	1	1						
31	2	23414-130000	GASKET	1	1						
32	2	23893-020002	PLUG	1	1						
33	1	120650-49720	CLAMP, HOSE	2	2						

N:Old ◄Yes/No► New, Q:Old ◄No/Yes► New, R:Old ◄Yes/Yes► New, S:Old ◄No/No► New, W:Add, Z:Discontinued, F:Interchangeable by set, K:Q'ty Change

(C)Copyrights YANMAR CO.,LTD.

Fig.34. M.ELBOW HIGH RISER(OPTION)

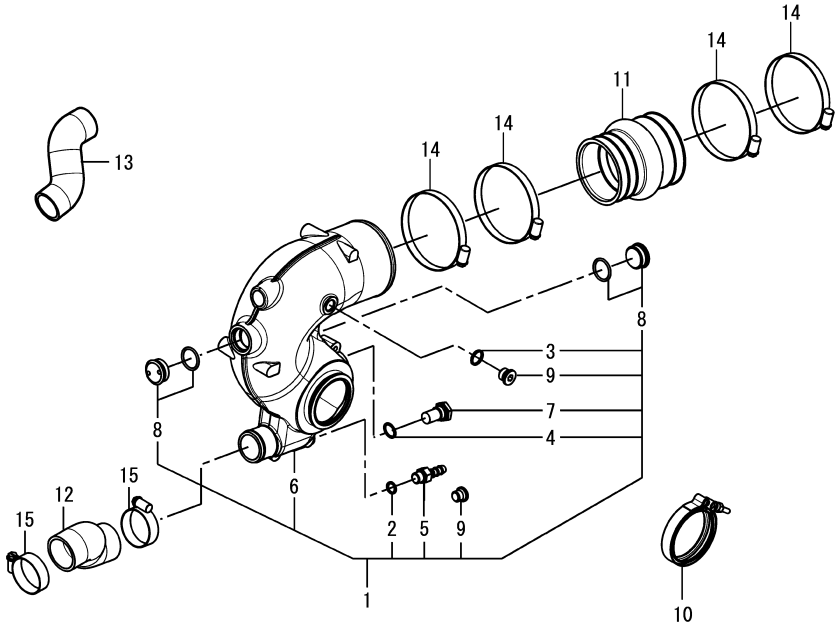

0CR10-G85600

34. M.ELBOW HIGH RISER(OPTION)

(A)=6BY3-220
(B)=6BY3-260
(C)=6BY3-220Z
(D)=6BY3-260Z
(E)=
(F)=

REF.	LEV.	PARTS NO.	DESCRIPTION	Q'TY (A)	(B)	(C)	(D)	(E)	(F)	I	R
1	1	120652-13400	ELBOW ASSY, MIXING	1	1	1	1				
2	2	120640-01250	RING, SEALING A14X18	1	1	1	1				
3	2	120640-01260	RING, SEALING A17X21	1	1	1	1				
4	2	120640-01270	RING, SEALING A18X22	1	1	1	1				
5	2	120650-13390	JOINT, DRAIN HIGHRIS	1	1	1	1				
6	2	120652-13410	ELBOW, MIXING HIGHRI	1	1	1	1				
7	2	120650-13420	ZINC, ANTI-CORROSIVE	1	1	1	1				
8	2	120650-13430	PLUG, M30X1.5	2	2	2	2				
9	2	120650-13490	PLUG	1	1	1	1				
10	1	120650-13450	V-CLAMP, TURBINE OUT	1	1	1	1				
11	1	120650-13520	JOINT, RUBBER	1	1	1	1				
12	1	120650-13750	HOSE, MIXING IN 10 R	1	1	1	1				
13	1	120650-13760	HOSE, MIXING IN 40 R	1	1	1	1				
14	1	119172-48010	CLIP, HOSE	4	4	4	4				
15	1	120650-49720	CLAMP, HOSE	2	2	2	2				

N:Old $\xleftrightarrow[\text{No}]{\text{Yes}}$ New, Q:Old $\xleftrightarrow[\text{Yes}]{\text{No}}$ New, R:Old $\xleftrightarrow[\text{Yes}]{\text{Yes}}$ New, S:Old $\xleftrightarrow[\text{No}]{\text{No}}$ New, W:Add, Z:Discontinued, F:Interchangeable by set, K:Q'ty Change

(C)Copyrights YANMAR CO.,LTD.

Fig.35. M.ELBOW 2PIECE HIGH RISER(OPTION)

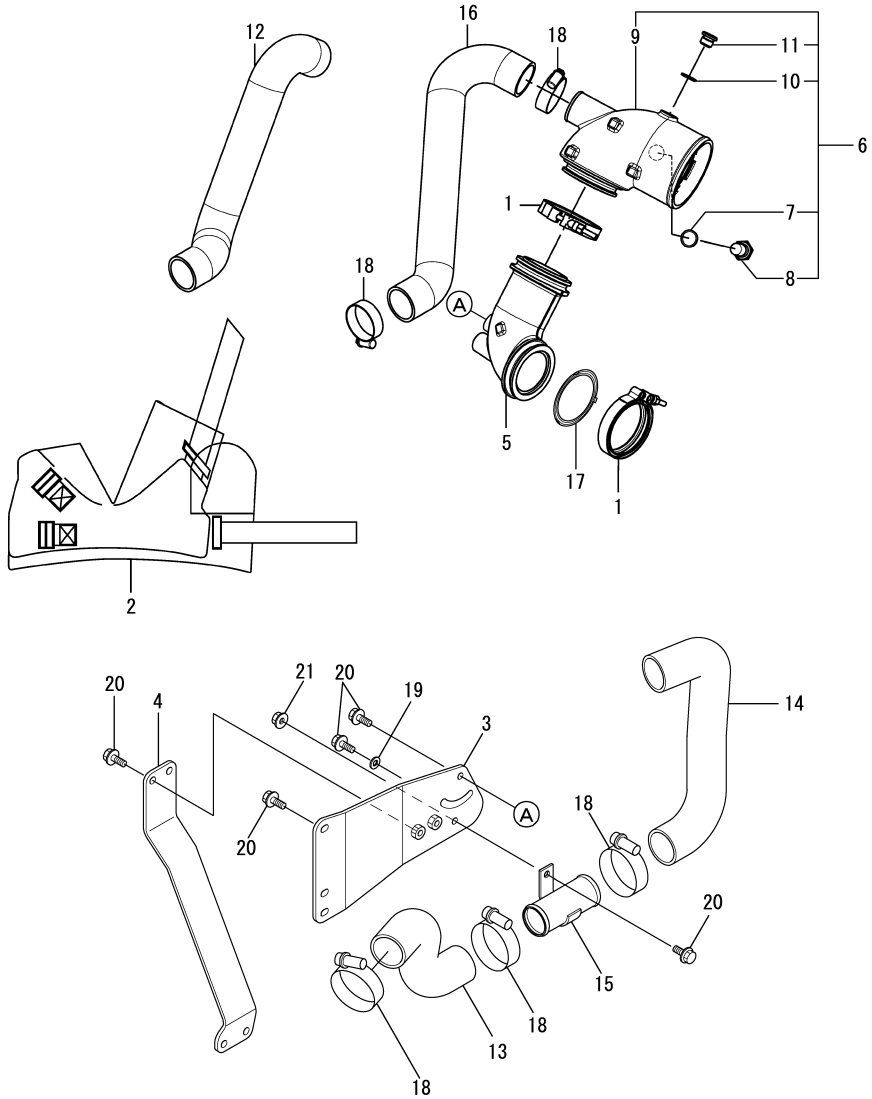

35. M.ELBOW 2PIECE HIGH RISER(OPTION)

(A)=6BY3-220
(B)=6BY3-260
(C)=6BY3-220Z
(D)=6BY3-260Z
(E)=
(F)=

REF.	LEV.	PARTS NO.	DESCRIPTION	Q'TY (A)	(B)	(C)	(D)	(E)	(F)	I	R
1	1	120650-13450	V-CLAMP, TURBINE OUT	2	2						
2	1	120651-13640	COVER, EXH MANIFOLD	1	1						
3	1	120662-13870	BRACKET, MIXING 2P A	1	1						
4	1	120662-13890	BRACKET, MIXING 2P B	1	1						
5	1	120650-13921	BEND, 2PIECE HIGHRIS	1	1						
6	1	120650-13930	MIXING ELBOW	1	1						
7	2	120640-01270	RING, SEALING A18X22	1	1						
8	2	120650-13420	ZINC, ANTI-CORROSIVE	1	1						
9	2	120650-13940	ELBOW, MIXING L TYPE	1	1						
10	2	23414-130000	GASKET	1	1						
11	2	23893-020002	PLUG	1	1						
12	1	120650-13951	HOSE, MIXING 40 2PIE	1	1						
13	1	120662-13950	HOSE, MIXING 2P A	1	1						
14	1	120662-13960	HOSE, MIXING 2P B	1	1						
15	1	120662-13970	PIPE, MIXING 2P	1	1						
16	1	120650-13980	HOSE, MIXING PORT 2P	1	1						
17	1	120650-13990	GASKET,TURBO OUT	1	1						
18	1	120650-49720	CLAMP, HOSE	4	4						
19	1	22137-100000	WASHER	1	1						
20	1	26106-080202	BOLT	10	10						
21	1	26366-080002	NUT	1	1						

N:Old ◄Yes/No► New, Q:Old ◄No/Yes► New, R:Old ◄Yes/Yes► New, S:Old ◄No/No► New, W:Add, Z:Discontinued, F:Interchangeable by set, K:Q'ty Change

(C)Copyrights YANMAR CO.,LTD.

Fig.36. BILGE PUMP(OPTION)

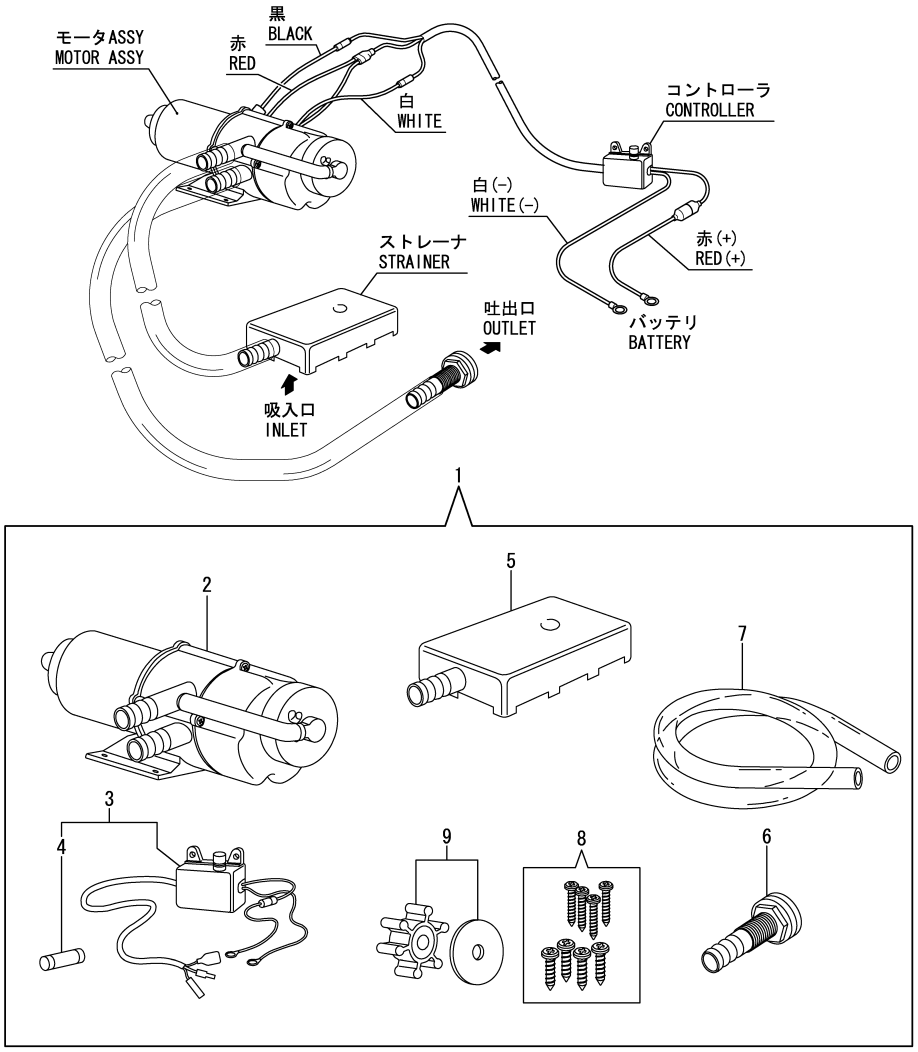

0CR10-G85600

36. BILGE PUMP(OPTION)

(A)=6BY3-220
(B)=6BY3-260
(C)=6BY3-220Z
(D)=6BY3-260Z
(E)=
(F)=

REF.	LEV.	PARTS NO.	DESCRIPTION	Q'TY (A)	(B)	(C)	(D)	(E)	(F)	I	R
1	1	977780-01211	PUMP ASSY, BILGE	1	1	1	1				
2	2	X0318101004	MOTER ASSY	1	1	1	1				
3	2	X158606410X	SWITH	1	1	1	1				
4	3	X8636015001	FUSE	1	1	1	1				
5	2	X179100022X	STRAINER	1	1	1	1				
6	2	X179100100X	PIPE ASSY	1	1	1	1				
7	2	X0044021509	HOSE A	1	1	1	1				
8	2	X199906101X	SCREW SET	1	1	1	1				
9	2	977780-03000	INPELLER	1	1	1	1				

N:Old ◄Yes/No► New, Q:Old ◄No/Yes► New, R:Old ◄Yes/Yes► New, S:Old ◄No/No► New, W:Add, Z:Discontinued, F:Interchangeable by set, K:Q'ty Change

(C)Copyrights YANMAR CO.,LTD.

Fig.37. STEERING OIL COOLER

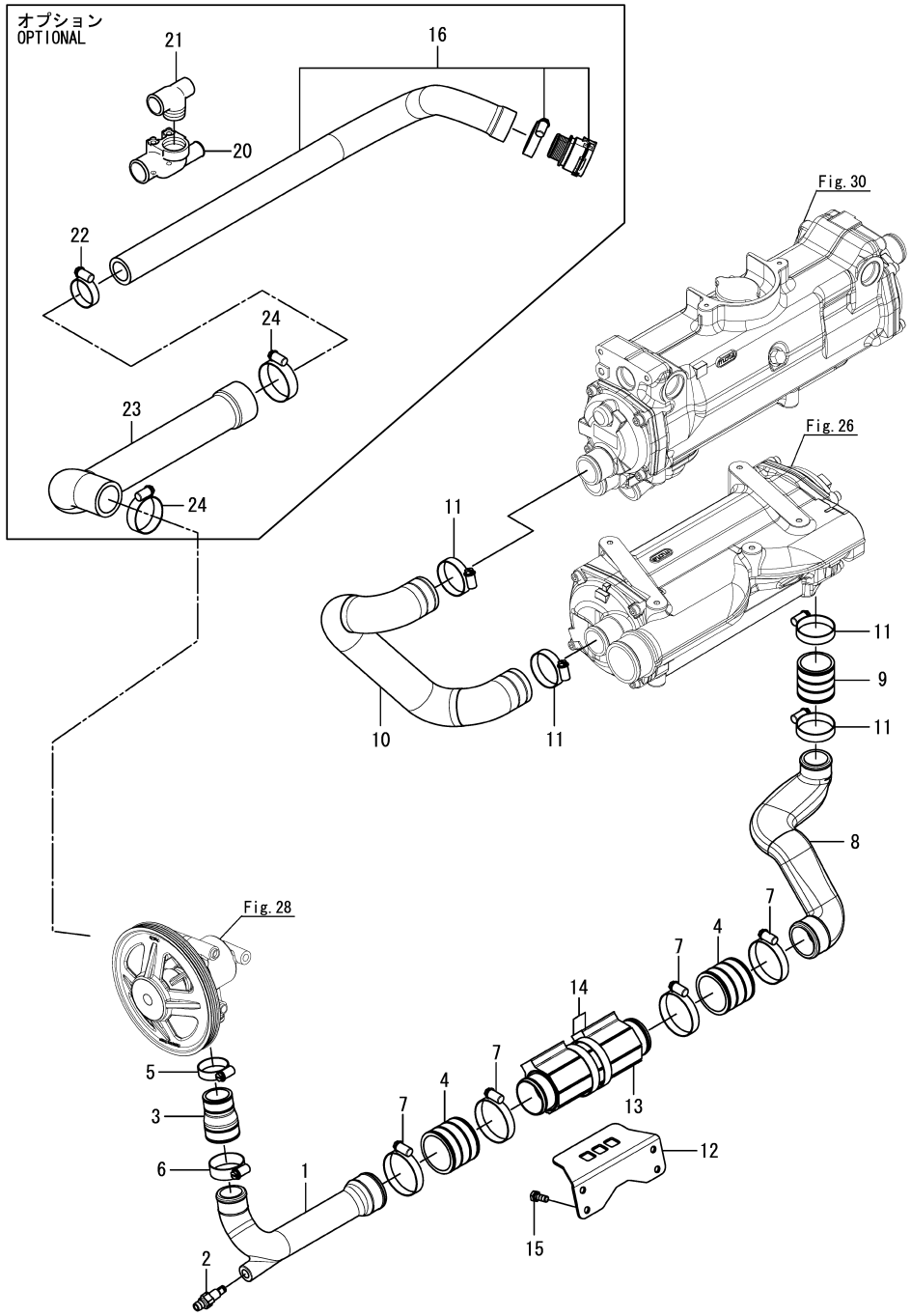

0CR10-G85600 37. STEERING OIL COOLER

(A)=6BY3-220
(B)=6BY3-260
(C)=6BY3-220Z
(D)=6BY3-260Z
(E)=
(F)=

REF.	LEV.	PARTS NO.	DESCRIPTION	Q'TY (A)	(B)	(C)	(D)	(E)	(F)	I	R
1	1	120660-49540	PIPE, WATER PUMP OUT	1	1	1	1				
2	1	120650-49610	PLUG, DRAIN	1	1	1	1				
3	1	120650-49520	HOSE, PUMP JOINT	1	1	1	1				
4	1	120650-49550	HOSE, COOLER JOINT	2	2	2	2				
5	1	120650-49710	CLAMP, HOSE	1	1	1	1				
6	1	120650-49710	CLAMP, HOSE	1	1	1	1				
7	1	120650-49720	CLAMP, HOSE	4	4	4	4				
8	1	120650-49580	PIPE, CAC IN	1	1	1	1				
9	1	120650-49590	HOSE, CAC IN	1	1	1	1				
10	1	120661-49560	HOSE, CAC-HE	1	1	1	1				
11	1	120650-49710	CLAMP, HOSE	4	4	4	4				
12	1	120650-33300	BRACKET, OIL COOLER	1	1	1	1				
13	1	120650-57010	COOLER,ATF GEAR OIL	1	1	1	1				
14	1	120640-01050	CLAMP, HOSE 80X13	2	2	2	2				
15	1	120640-01520	SCREW, M8X20	4	4	4	4				
16	1	120650-42620	HOSE ASSY, DRIVE OUT			1	1				
20	1	119775-48640	BEND, ELBOW			1	1				
21	1	119779-49050	BEND, WATER			1	1				
22	1	120650-49710	CLAMP, HOSE			1	1				
23	1	120650-42650	HOSE ASSY, PUMP IN	1	1	1	1				
24	1	120650-49720	CLAMP, HOSE	2	2	2	2				

N:Old $\overset{\text{Yes}}{\underset{\text{No}}{\leftrightarrow}}$ New, Q:Old $\overset{\text{No}}{\underset{\text{Yes}}{\leftrightarrow}}$ New, R:Old $\overset{\text{Yes}}{\underset{\text{Yes}}{\leftrightarrow}}$ New, S:Old $\overset{\text{No}}{\underset{\text{No}}{\leftrightarrow}}$ New, W:Add, Z:Discontinued, F:Interchangeable by set, K:Q'ty Change

(C)Copyrights YANMAR CO.,LTD.

Fig.38. STEERING PUMP/PIPE

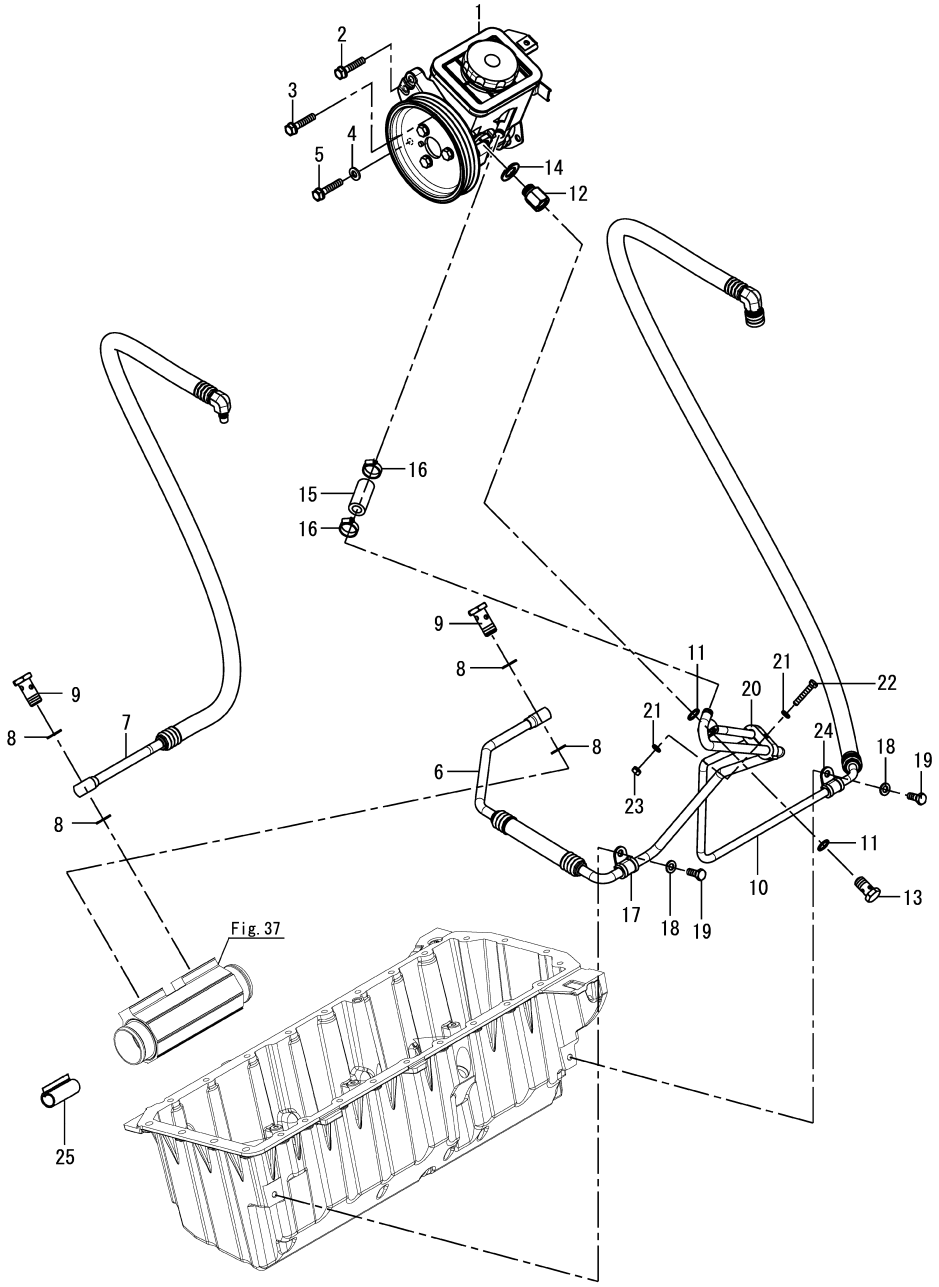

38. STEERING PUMP/PIPE

(A)=6BY3-220
(B)=6BY3-260
(C)=6BY3-220Z
(D)=6BY3-260Z
(E)=
(F)=

REF.	LEV.	PARTS NO.	DESCRIPTION	Q'TY (A)	(B)	(C)	(D)	(E)	(F)	I	R
1	1	120640-00150	PUMP ASSY,STEERING			1	1				
2	1	120640-01930	BOLT, M8X80-8.8			1	1				
3	1	120640-01870	BOLT, M8X40-8.8			1	1				
4	1	120640-02220	WASHER			1	1				
5	1	120640-01570	BOLT, M6X80-8.8			1	1				
6	1	120660-85320	PIPE, ATF COOLER OUT			1	1				
7	1	120660-85360	PIPE, ATF RETURN			1	1				
8	1	120640-01260	RING, SEALING A17X21			4	4				
9	1	120650-85370	SCREW, HOLLOW			2	2				
10	1	120660-85330	PIPE, ATF PUMP OUT			1	1				
11	1	120640-01240	RING, SEALING A14X18			2	2				
12	1	120650-57410	ADAPTER,ATF PUMP			1	1				
13	1	120640-01420	SCREW, HOLLOW			1	1				
14	1	120640-00300	RING, SEALING A30X36			1	1				
15	1	120650-57440	HOSE, ATF PUMP INLET			1	1				
16	1	120640-01020	CLAMP, HOSE 27X9			2	2				
17	1	120650-85390	CLAMP, PIPE			1	1				
18	1	120640-02230	WASHER			2	2				
19	1	120640-01520	SCREW, M8X20			2	2				
20	1	120650-85430	CLAMP, PIPE			1	1				
21	1	120640-02220	WASHER			2	2				
22	1	120640-01830	BOLT, M6X35-8.8			1	1				
23	1	120640-00200	NUT,M6			1	1				
24	1	120650-85410	CLAMP, PIPE			1	1				
25	1	120650-85450	PROTECTOR, HEAT POWE			2	2				

N:Old $\xleftrightarrow[\text{No}]{\text{Yes}}$ New, Q:Old $\xleftrightarrow[\text{Yes}]{\text{No}}$ New, R:Old $\xleftrightarrow[\text{Yes}]{\text{Yes}}$ New, S:Old $\xleftrightarrow[\text{No}]{\text{No}}$ New, W:Add, Z:Discontinued, F:Interchangeable by set, K:Q'ty Change

(C)Copyrights YANMAR CO.,LTD.

Fig.39. FUEL OIL FILTER

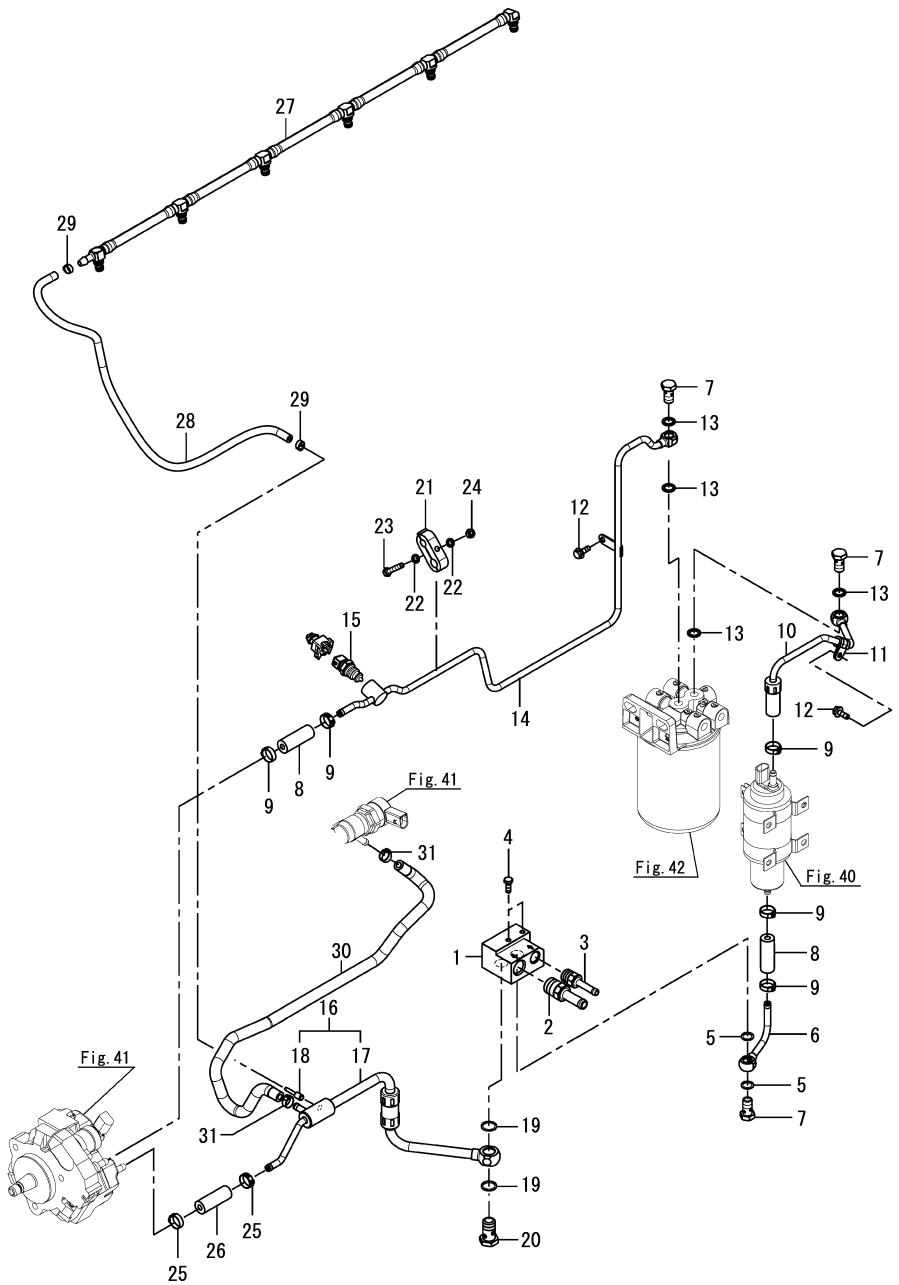

39. FUEL OIL FILTER

(A)=6BY3-220
(B)=6BY3-260
(C)=6BY3-220Z
(D)=6BY3-260Z
(E)=
(F)=

REF.	LEV.	PARTS NO.	DESCRIPTION	Q'TY (A)	(B)	(C)	(D)	(E)	(F)	I	R
1	1	120650-55220	BLOCK ASSY, FO JOINT	1	1	1	1				
2	1	120650-55730	NIPPLE, FUEL RETURN	1	1	1	1				
3	1	120650-55720	NIPPLE, FUEL SUPPLY	1	1	1	1				
4	1	120640-01470	SCREW, M6X16	2	2	2	2				
5	1	120640-01230	RING, SEALING A12X16	2	2	2	2				
6	1	120651-55310	PIPE, FUEL BLOCK-PUM	1	1	1	1				
7	1	120640-01430	SCREW, HOLLOW	3	3	3	3				
8	1	120650-55320	HOSE, PUMP-FILTER	2	2	2	2				
9	1	120650-55840	CLAMP,HOSE1EAR19.2	5	5	5	5				
10	1	120651-55340	PIPE, FUEL FILTER IN	1	1	1	1				
11	1	120650-39190	CLAMP, PIPE	1	1	1	1				
12	1	120640-02080	BOLT, M6X16-8.8	2	2	2	2				
13	1	120640-01300	GASKET, 12X1.5	4	4	4	4				
14	1	120660-55300	PIPE,FUEL FILTER OUT	1	1	1	1				
15	1	120650-55710	FUEL TEMPERATURE SEN	1	1	1	1				
16	1	120661-55330	PIPE,FO LINE RETURN	1	1	1	1				
17	2	120660-55290	PIPE,FO LINE RETURN	1	1	1	1				
18	2	120650-55660	VALVE,FUEL RETURN	1	1	1	1				
19	1	120640-01310	GASKET, 16X1.5	2	2	2	2				
20	1	120640-01400	BANJO BOLT, 16	1	1	1	1				
21	1	120650-85430	CLAMP, PIPE	1	1	1	1				
22	1	120640-02220	WASHER	2	2	2	2				
23	1	120640-01830	BOLT, M6X35-8.8	1	1	1	1				
24	1	120640-00200	NUT,M6	1	1	1	1				
25	1	120650-55840	CLAMP,HOSE1EAR19.2	2	2	2	2				
26	1	120650-55320	HOSE, PUMP-FILTER	1	1	1	1				
27	1	120660-55810	FUEL RETURN LINE 6BY	1	1	1	1				
28	1	120660-55820	HOSE,INJECTOR RETURN	1	1	1	1				
29	1	120650-55830	CLAMP,HOSE1EAR 11.9	2	2	2	2				
30	1	120660-55630	HOSE,FO RAIL RETURN	1	1	1	1				
31	1	120650-55850	CLAMP, HOSE1EAR14.0	2	2	2	2				

N:Old $\xleftarrow[\text{No}]{\text{Yes}}$ New, Q:Old $\xleftarrow[\text{Yes}]{\text{No}}$ New, R:Old $\xleftarrow[\text{Yes}]{\text{Yes}}$ New, S:Old $\xleftarrow[\text{No}]{\text{No}}$ New, W:Add, Z:Discontinued, F:Interchangeable by set, K:Q'ty Change

(C)Copyrights YANMAR CO.,LTD.

Fig.40. PUMP, FUEL LOW

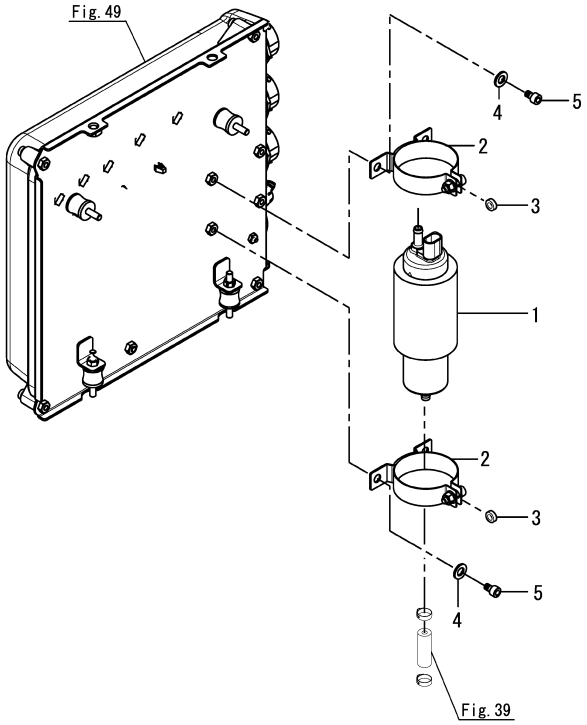

0CR10-G85600 40. PUMP, FUEL LOW

(A)=6BY3-220
(B)=6BY3-260
(C)=6BY3-220Z
(D)=6BY3-260Z
(E)=
(F)=

REF.	LEV.	PARTS NO.	DESCRIPTION	Q'TY (A)	(B)	(C)	(D)	(E)	(F)	I	R
1	1	120650-51500	PUMP ASSY, PRESSURE	1	1	1	1				
2	1	120650-51630	CLAMP, DN61	2	2	2	2				
3	1	120650-55540	SPACER, FUEL PUMP CL	2	2	2	2				
4	1	120640-02220	WASHER	4	4	4	4				
5	1	120640-01450	SCREW, M6X10	4	4	4	4				

N:Old ◄Yes/No► New, Q:Old ◄No/Yes► New, R:Old ◄Yes/Yes► New, S:Old ◄No/No► New, W:Add, Z:Discontinued, F:Interchangeable by set, K:Q'ty Change

(C)Copyrights YANMAR CO.,LTD.

Fig.41. HIGH-PRESSURE PUMP/INJECTOR

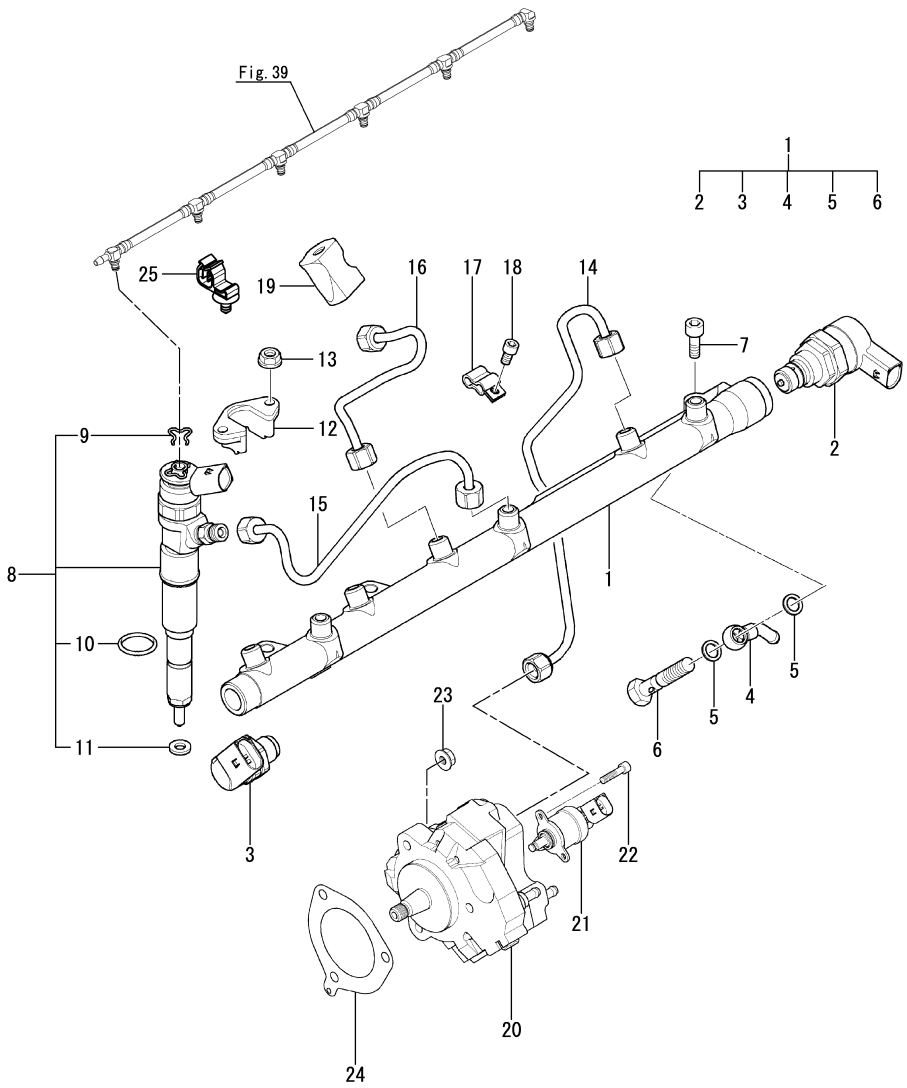

41. HIGH-PRESSURE PUMP/INJECTOR

(A)=6BY3-220
(B)=6BY3-260
(C)=6BY3-220Z
(D)=6BY3-260Z
(E)=
(F)=

REF.	LEV.	PARTS NO.	DESCRIPTION	Q'TY (A)	(B)	(C)	(D)	(E)	(F)	I	R
1	1	165001-35880	ACCUMULATOR,PRESSURE	1	1	1	1				
2	2	165001-35650	VALVE, REGULATING	1	1	1	1				
3	2	165000-70390	SENSOR, PRESSURE	1	1	1	1				
4	2	165001-35840	CONNECTOR	1	1	1	1				
5	2	165000-70160	RING, GASKET	2	2	2	2				
6	2	165001-60010	BOLT, HOLLOW	1	1	1	1				
7	1	165001-35540	SCREW, HEAD M8X25	3	3	3	3				
8	1	165000-70560	INJECTOR, RMFD	6	6	6	6				
9	2	165000-70290	CLAMP	6	6	6	6				
10	2	165000-70430	O-RING, 22 2	6	6	6	6				
11	2	165000-70270	RING, GASKET	6	6	6	6				
12	1	165000-70420	FLANGE	6	6	6	6				
13	1	165000-70640	NUT, FLANGE M6	12	12	12	12				
14	1	165001-35940	HOSE ASSY, PRESSURE	1	1	1	1				
15	1	165001-35950	HOSE ASSY, PRESSURE	3	3	3	3				
16	1	165000-93350	HOSE,PRESSURE	3	3	3	3				
17	1	165000-70410	CLAMP	3	3	3	3				
18	1	165001-46270	SCREW, HEAD M5X12	2	2	2	2				
19	1	165000-70300	MOUNTING, RUBBER	1	1	1	1				
20	1	165000-70200	PUMP, HIGH PRESSURE	1	1	1	1				
21	1	165000-70180	MEASURING, UNIT	1	1	1	1				
22	1	165001-66930	SCREW	2	2	2	2				
23	1	165001-66890	NUT, HEX AM8	3	3	3	3				
24	1	165000-70150	GASKET, STEEL	1	1	1	1				
25	1	120650-17310	CLIP,HOSE FUEL	1	1	1	1				

N:Old $\overset{\text{Yes}}{\underset{\text{No}}{\leftrightarrow}}$ New, Q:Old $\overset{\text{No}}{\underset{\text{Yes}}{\leftrightarrow}}$ New, R:Old $\overset{\text{Yes}}{\underset{\text{Yes}}{\leftrightarrow}}$ New, S:Old $\overset{\text{No}}{\underset{\text{No}}{\leftrightarrow}}$ New, W:Add, Z:Discontinued, F:Interchangeable by set, K:Q'ty Change

(C)Copyrights YANMAR CO.,LTD.

Fig.42. FUEL FILTER

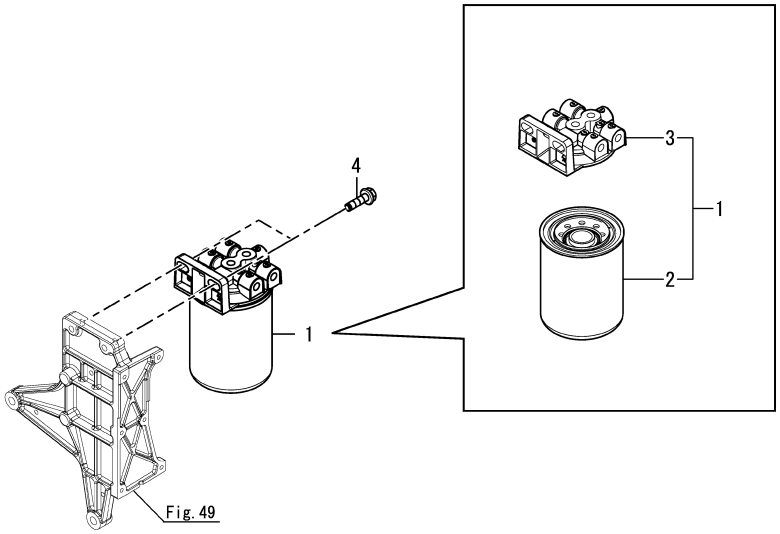

0CR10-G85600

42. FUEL FILTER

(A)=6BY3-220
(B)=6BY3-260
(C)=6BY3-220Z
(D)=6BY3-260Z
(E)=
(F)=

REF.	LEV.	PARTS NO.	DESCRIPTION	Q'TY (A)	(B)	(C)	(D)	(E)	(F)	I	R
1	1	120651-55010	FILTER ASSY,FO FINE	1	1	1	1				
2	2	120651-55020	ELEMENT, FUEL FILTER	1	1	1	1				
3	2	120651-55050	HEAD, FUEL FILTER	1	1	1	1				
4	1	120640-01970	BOLT, M10X35-10.9	2	2	2	2				

N:Old ◄Yes/No► New, Q:Old ◄No/Yes► New, R:Old ◄Yes/Yes► New, S:Old ◄No/No► New, W:Add, Z:Discontinued, F:Interchangeable by set, K:Q'ty Change

(C)Copyrights YANMAR CO.,LTD.

Fig.43. FUEL FILTER(OPTION)

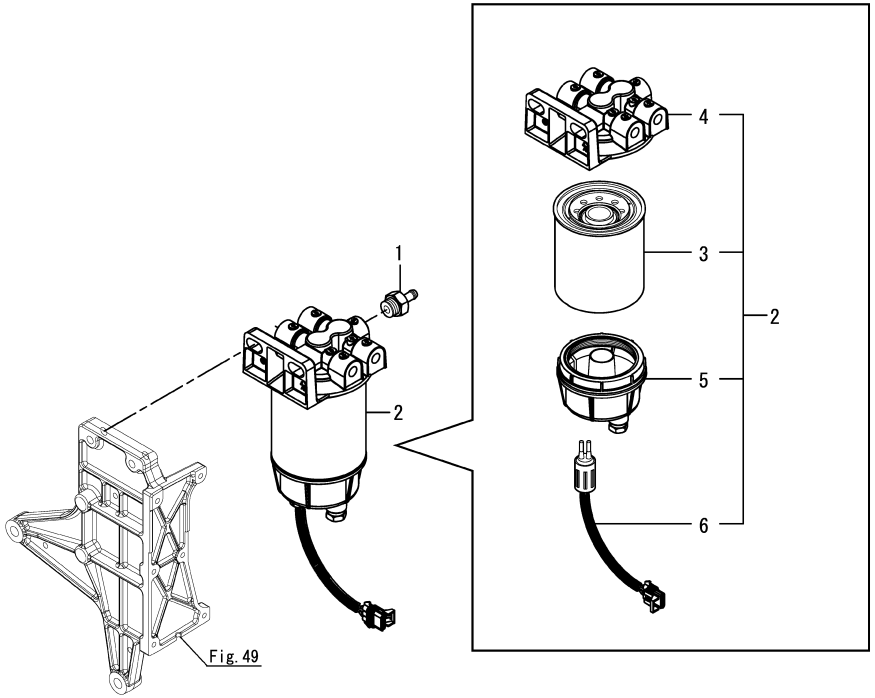

0CR10-G85600

43. FUEL FILTER(OPTION)

(A)=6BY3-220
(B)=6BY3-260
(C)=6BY3-220Z
(D)=6BY3-260Z
(E)=
(F)=

REF.	LEV.	PARTS NO.	DESCRIPTION	Q'TY (A)	(B)	(C)	(D)	(E)	(F)	I	R
1	1	120651-55440	JOINT, FO FILTER IN	1	1	1	1				
2	1	120650-55010	FILTER ASSY, FUEL	1	1	1	1				
3	2	120650-55020	ELEMENT, FUEL	1	1	1	1				
4	2	120650-55050	HEAD, FUEL FILTER	1	1	1	1				
5	2	120650-55060	BOWL,FUEL FILTER	1	1	1	1				
6	2	120650-55070	PROBE,FUEL FILTER	1	1	1	1				

N:Old ◄Yes/No► New, Q:Old ◄No/Yes► New, R:Old ◄Yes/Yes► New, S:Old ◄No/No► New, W:Add, Z:Discontinued, F:Interchangeable by set, K:Q'ty Change

(C)Copyrights YANMAR CO.,LTD.

Fig.44. STARTING MOTOR

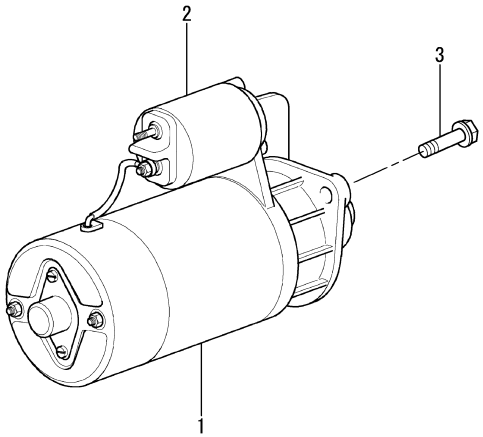

0CR10-G85600 44. STARTING MOTOR

(A)=6BY3-220
(B)=6BY3-260
(C)=6BY3-220Z
(D)=6BY3-260Z
(E)=
(F)=

REF.	LEV.	PARTS NO.	DESCRIPTION	Q'TY (A)	(B)	(C)	(D)	(E)	(F)	I	R
1	1	165001-35760	MOTOR, STARTER 2.0KW	1	1	1	1				
2	1	165001-35770	SWITCH, SOLENOID	1	1	1	1				
3	1	165000-67550	BOLT, M10X65-8.8	2	2	2	2				

N:Old $\xleftrightarrow[\text{No}]{\text{Yes}}$ New, Q:Old $\xleftrightarrow[\text{Yes}]{\text{No}}$ New, R:Old $\xleftrightarrow[\text{Yes}]{\text{Yes}}$ New, S:Old $\xleftrightarrow[\text{No}]{\text{No}}$ New, W:Add, Z:Discontinued, F:Interchangeable by set, K:Q'ty Change

(C)Copyrights YANMAR CO.,LTD.

Fig.45. ALTERNATOR

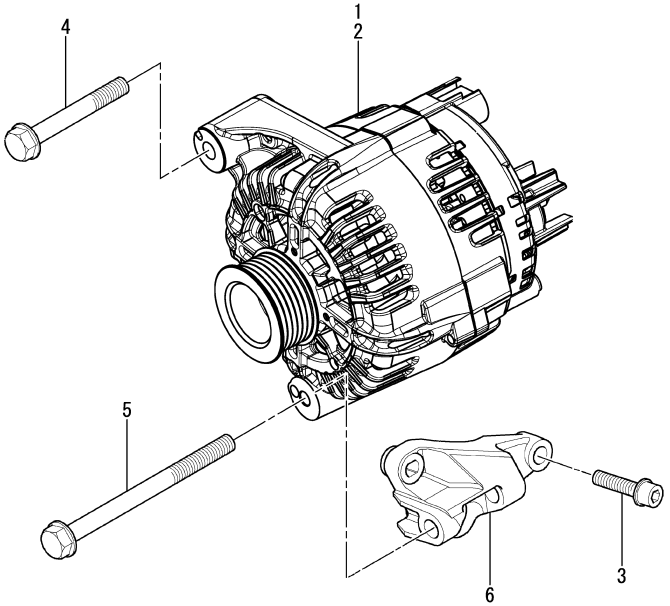

0CR10-G85600 45. ALTERNATOR

(A)=6BY3-220
(B)=6BY3-260
(C)=6BY3-220Z
(D)=6BY3-260Z
(E)=
(F)=

REF.	LEV.	PARTS NO.	DESCRIPTION	Q'TY (A)	(B)	(C)	(D)	(E)	(F)	I	R
1	1	165001-25180	ALTERNATOR	1	1	1	1				
2	1	165001-60020	ALTERNATOR, RMFD	1	1	1	1				
3	1	165001-35670	SCREW, M8X30	3	3	3	3				
4	1	165000-67180	BOLT, HEX M10X70	1	1	1	1				
5	1	165001-66860	BOLT, HEX M10X125	1	1	1	1				
6	1	165000-70070	BRACKET, SUPPORT	1	1	1	1				

N:Old $\xleftrightarrow[\text{No}]{\text{Yes}}$ New, Q:Old $\xleftrightarrow[\text{Yes}]{\text{No}}$ New, R:Old $\xleftrightarrow[\text{Yes}]{\text{Yes}}$ New, S:Old $\xleftrightarrow[\text{No}]{\text{No}}$ New, W:Add, Z:Discontinued, F:Interchangeable by set, K:Q'ty Change

(C)Copyrights YANMAR CO.,LTD.

Fig.46. WIRE HARNESS(ECU)

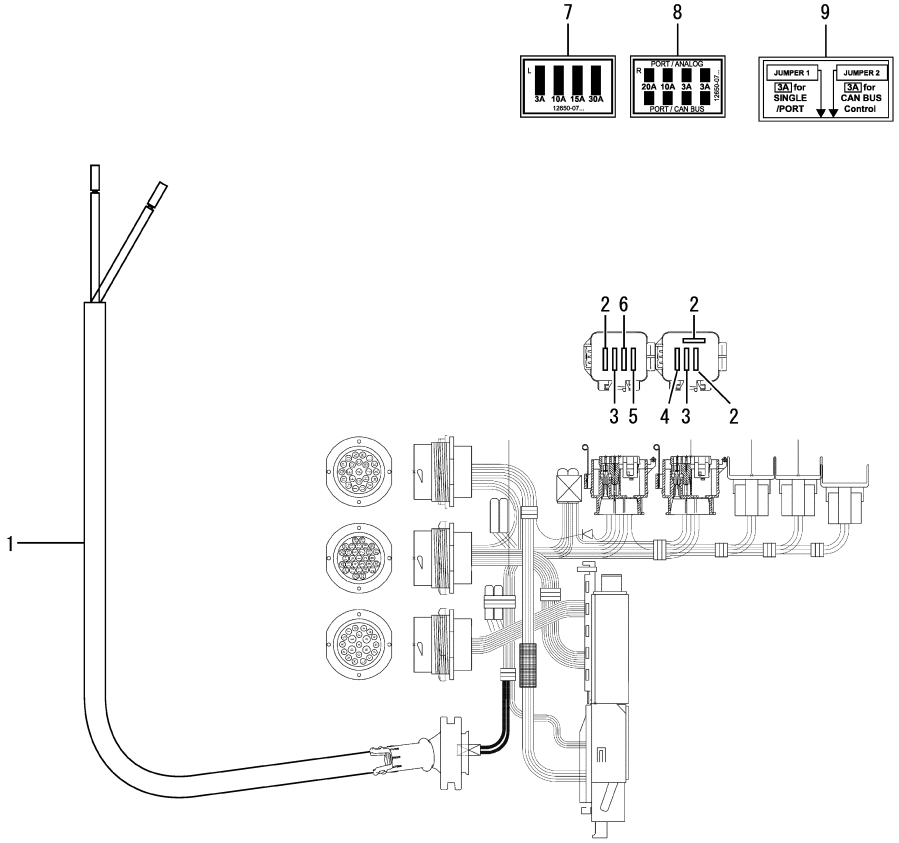

0CR10-G85600 46. WIRE HARNESS(ECU)

(A)=6BY3-220
(B)=6BY3-260
(C)=6BY3-220Z
(D)=6BY3-260Z
(E)=
(F)=

REF.	LEV.	PARTS NO.	DESCRIPTION	Q'TY (A)	(B)	(C)	(D)	(E)	(F)	I	R
1	1	120650-78051	HARNESS,WIRE ECU BOX	1	1	1	1				
2	1	120650-75500	LINK, FUSE	3	3	3	3				
3	1	120650-75510	LINK, FUSE	2	2	2	2				
4	1	120650-75520	LINK, FUSE	1	1	1	1				
5	1	120650-75530	LINK, FUSE	1	1	1	1				
6	1	120650-75540	FUSE(15A	1	1	1	1				
7	1	120650-07250	LABEL,FUSE BOX LEFT	1	1	1	1				
8	1	120650-07260	LABEL,FUSE BOX RIGHT	1	1	1	1				
9	1	120650-07270	LABEL,JUMPER	1	1	1	1				

N:Old $\frac{\text{Yes}}{\text{No}}$ New, Q:Old $\frac{\text{No}}{\text{Yes}}$ New, R:Old $\frac{\text{Yes}}{\text{Yes}}$ New, S:Old $\frac{\text{No}}{\text{No}}$ New, W:Add, Z:Discontinued, F:Interchangeable by set, K:Q'ty Change

(C)Copyrights YANMAR CO.,LTD.

Fig.47. WIRE HARNESS

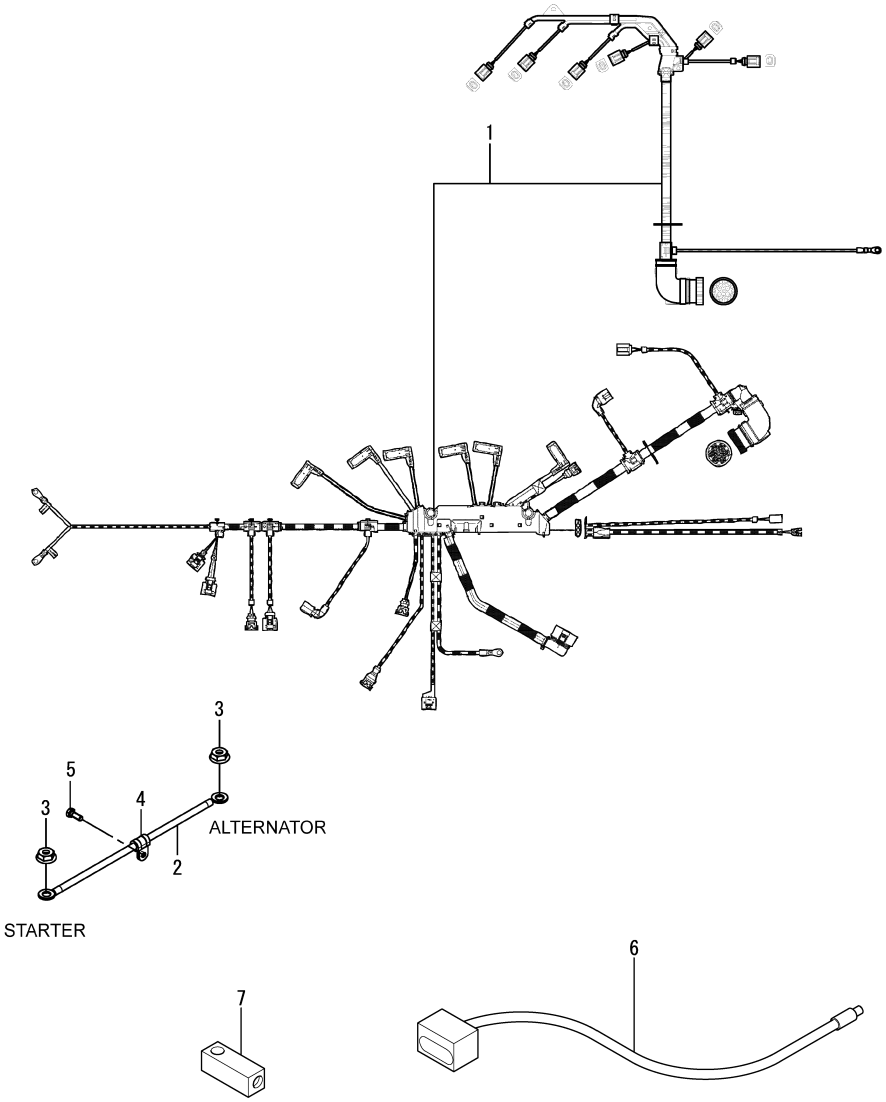

47. WIRE HARNESS

(A)=6BY3-220
(B)=6BY3-260
(C)=6BY3-220Z
(D)=6BY3-260Z
(E)=
(F)=

REF.	LEV.	PARTS NO.	DESCRIPTION	Q'TY (A)	(B)	(C)	(D)	(E)	(F)	I	R
1	1	120660-78002	HARNESS, WIRE	1	1	1	1				
2	1	120660-78211	HARNESS, WIRE CHARGE	1	1	1	1				
3	1	120640-00330	NUT, FLANGE M8	2	2	2	2				
4	1	120660-78600	CLAMP, PIPE	1	1	1	1				
5	1	120640-01560	SCREW, M10X25	1	1	1	1				
6	1	120650-77530	HARNESS,OIL PRESSURE	1	1	1	1				
7	1	120660-35100	ADAPTER,OIL SWITCH	1	1	1	1				

N:Old $\xleftarrow[\text{No}]{\text{Yes}}$ New, Q:Old $\xleftarrow[\text{Yes}]{\text{No}}$ New, R:Old $\xleftarrow[\text{Yes}]{\text{Yes}}$ New, S:Old $\xleftarrow[\text{No}]{\text{No}}$ New, W:Add, Z:Discontinued, F:Interchangeable by set, K:Q'ty Change

(C)Copyrights YANMAR CO.,LTD.

Fig.48. AIR HEATER

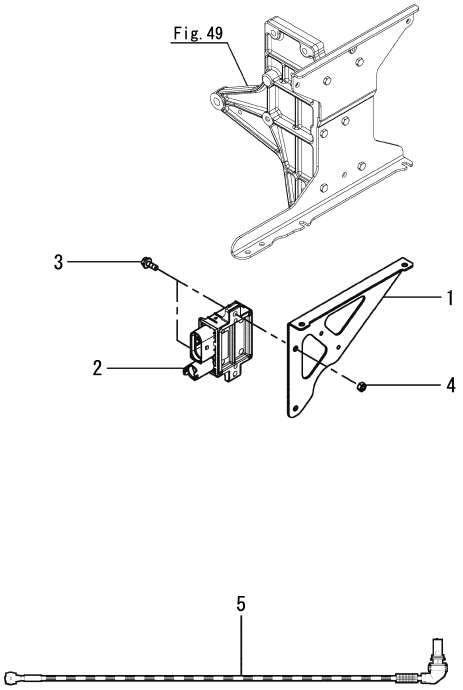

0CR10-G85600 48. AIR HEATER

(A)=6BY3-220
(B)=6BY3-260
(C)=6BY3-220Z
(D)=6BY3-260Z
(E)=
(F)=

REF.	LEV.	PARTS NO.	DESCRIPTION	Q'TY (A)	(B)	(C)	(D)	(E)	(F)	I	R
1	1	120651-75871	BRACKET,HEATER UNIT	1	1	1	1				
2	1	120660-78240	CONTROLLER, HEATER 6	1	1	1	1				
3	1	120640-02080	BOLT, M6X16-8.8	2	2	2	2				
4	1	120640-00200	NUT,M6	2	2	2	2				
5	1	120650-78260	CABLE, POSITIVE	1	1	1	1				

N:Old $\xleftrightarrow[\text{No}]{\text{Yes}}$ New, Q:Old $\xleftrightarrow[\text{Yes}]{\text{No}}$ New, R:Old $\xleftrightarrow[\text{Yes}]{\text{Yes}}$ New, S:Old $\xleftrightarrow[\text{No}]{\text{No}}$ New, W:Add, Z:Discontinued, F:Interchangeable by set, K:Q'ty Change

(C)Copyrights YANMAR CO.,LTD.

Fig.49. ECU

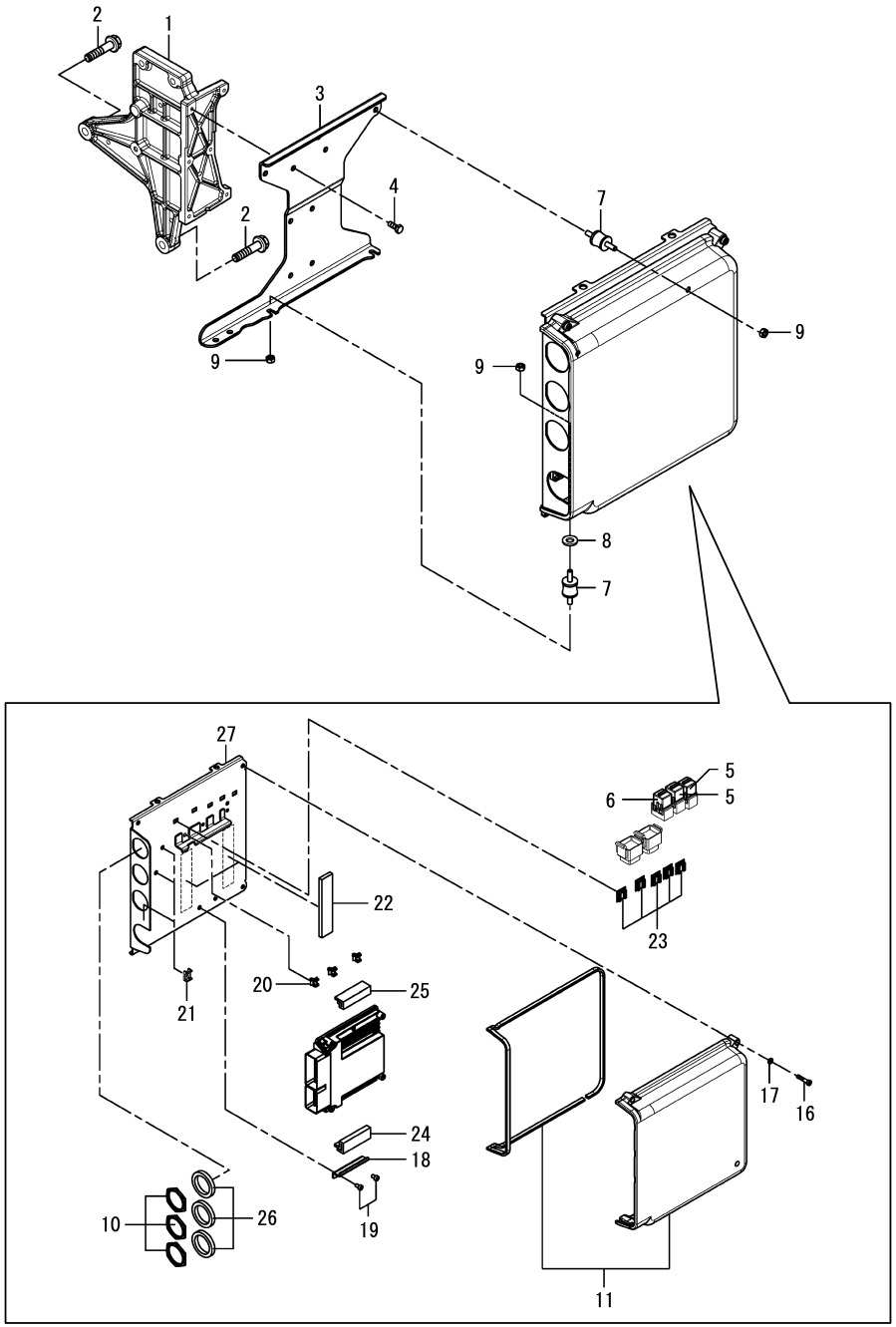

49. ECU

(A)=6BY3-220
(B)=6BY3-260
(C)=6BY3-220Z
(D)=6BY3-260Z
(E)=
(F)=

REF.	LEV.	PARTS NO.	DESCRIPTION	Q'TY (A)	(B)	(C)	(D)	(E)	(F)	I	R
1	1	120651-75410	SUPPORT, ECU BOX	1	1	1	1				
2	1	120640-01980	BOLT, M10X45-8.8	2	2	2	2				
3	1	120651-75290	BRACKET, ECU BOX	1	1	1	1				
4	1	120640-01470	SCREW, M6X16	6	6	6	6				
5	1	120640-00170	RELAY	1	1	1	1				
6	1	120640-00180	RELAY	2	2	2	2				
7	1	120650-75450	MOUNT, RUBBER	4	4	4	4				
8	1	120640-02220	WASHER	2	2	2	2				
9	1	120640-00200	NUT,M6	8	8	8	8				
10	1	120650-75360	NUT,PANEL	3	3	3	3				
11	1	120650-75700	COVER ASSY, E-BOX	1	1	1	1				
16	1	120640-01490	SCREW, M6X30	4	4	4	4				
17	1	120640-02220	WASHER	4	4	4	4				
18	1	120650-75350	BRACKET,ECU A	1	1	1	1				
19	1	120640-01450	SCREW, M6X10	2	2	2	2				
20	1	120650-75810	CLIP,WIRE	3	3	3	3				
21	1	120650-75820	GROMMET, HOLDER	3	3	3	3				
22	1	120651-75830	RUBBER SHEET, ECU	2	2	2	2				
23	1	120650-75320	CLIP, FUSE	5	5	5	5				
24	1	120650-75930	ISOLATOR, ECU LOWER	1	1	1	1				
25	1	120650-75940	ISOLATOR, ECU UPPER	1	1	1	1				
26	1	120650-75380	SILICON SEAL	3	3	3	3				
27	1	120650-75250	PLATE ASSY, BASE ECU	1	1	1	1				

N:Old $\xleftarrow[\text{No}]{\text{Yes}}$ New, Q:Old $\xleftarrow[\text{Yes}]{\text{No}}$ New, R:Old $\xleftarrow[\text{Yes}]{\text{Yes}}$ New, S:Old $\xleftarrow[\text{No}]{\text{No}}$ New, W:Add, Z:Discontinued, F:Interchangeable by set, K:Q'ty Change

(C)Copyrights YANMAR CO.,LTD.

Fig.50. ECU EXTENSION HARNES

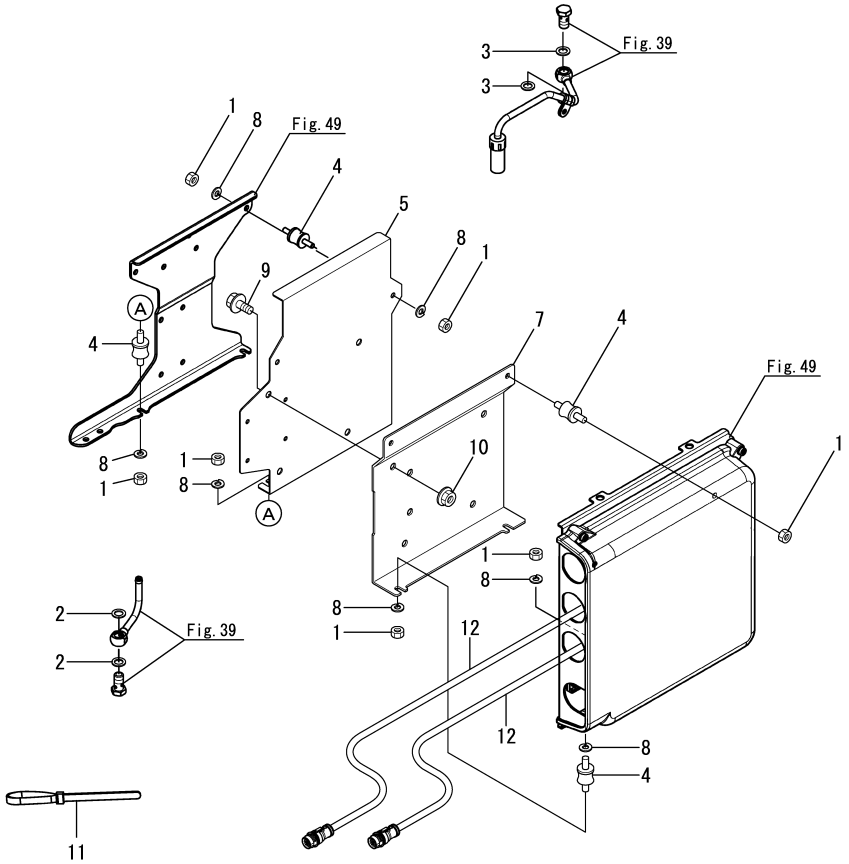

0CR10-G85600

50. ECU EXTENSION HARNES

(A)=6BY3-220
(B)=6BY3-260
(C)=6BY3-220Z
(D)=6BY3-260Z
(E)=
(F)=

REF.	LEV.	PARTS NO.	DESCRIPTION	Q'TY (A)	(B)	(C)	(D)	(E)	(F)	I	R
1	1	120640-00200	NUT,M6	8	8	8	8				
2	1	120640-01230	RING, SEALING A12X16	2	2	2	2				
3	1	120640-01300	GASKET, 12X1.5	2	2	2	2				
4	1	120650-75450	MOUNT, RUBBER	4	4	4	4				
5	1	120650-75910	FUEL PUMP BRACKET	1	1	1	1				
7	1	120650-75920	ECU RELOCATION BRACK	1	1	1	1				
8	1	22213-060000	WASHER, SPRING	16	16	16	16				
9	1	26106-080142	BOLT	4	4	4	4				
10	1	26366-080002	NUT	4	4	4	4				
11	1	121750-59890	BAND	2	2	2	2				
12	1	120650-78300	ECU EXTENSION HARNES	1	1	1	1				

N:Old $\xleftrightarrow[\text{No}]{\text{Yes}}$ New, Q:Old $\xleftrightarrow[\text{Yes}]{\text{No}}$ New, R:Old $\xleftrightarrow[\text{Yes}]{\text{Yes}}$ New, S:Old $\xleftrightarrow[\text{No}]{\text{No}}$ New, W:Add, Z:Discontinued, F:Interchangeable by set, K:Q'ty Change

(C)Copyrights YANMAR CO.,LTD.

Fig.51. VALVE(OIL STOP)

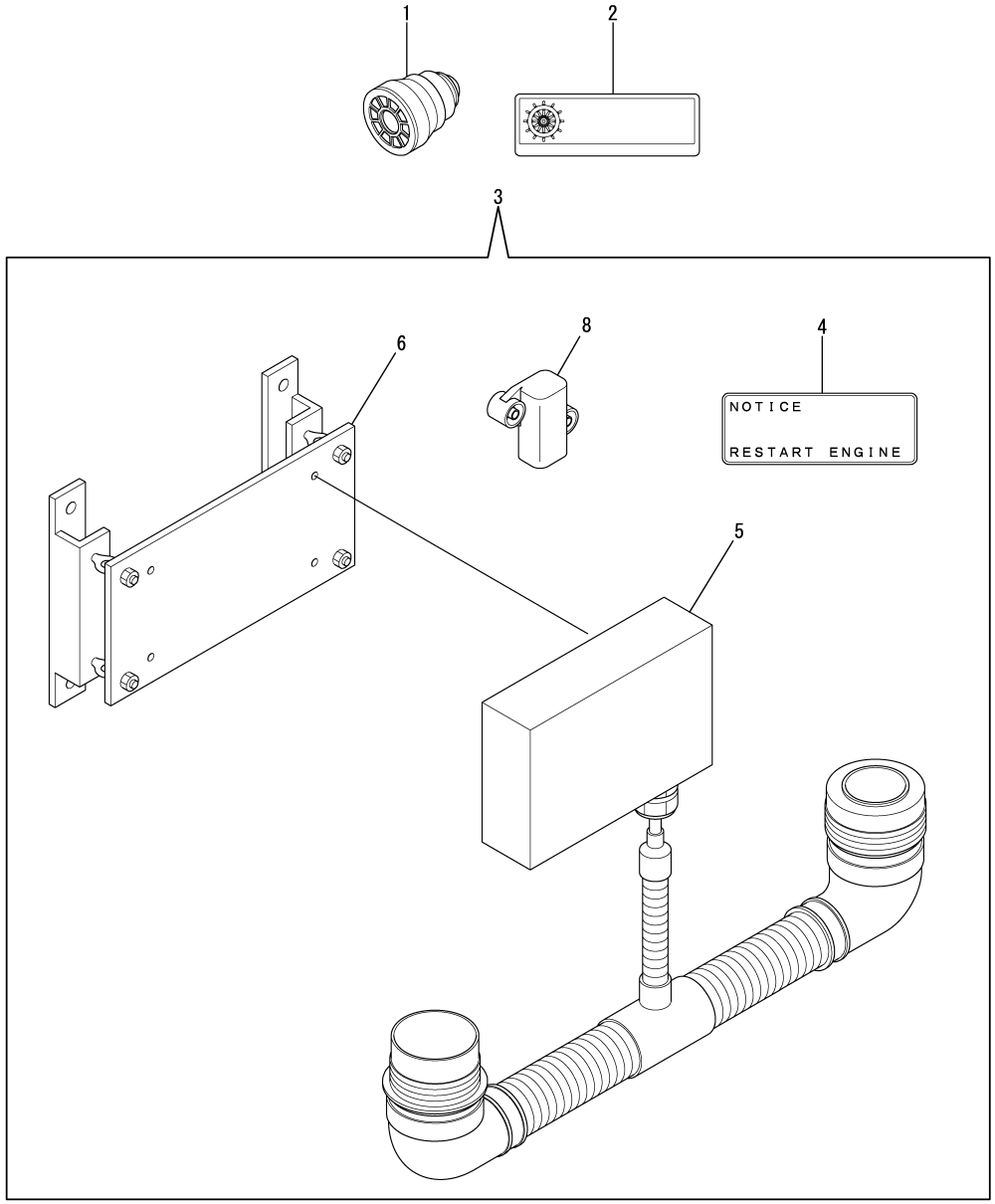

0CR10-G85600

51. VALVE(OIL STOP)

(A)=6BY3-220
(B)=6BY3-260
(C)=6BY3-220Z
(D)=6BY3-260Z
(E)=
(F)=

REF.	LEV.	PARTS NO.	DESCRIPTION	Q'TY (A)	(B)	(C)	(D)	(E)	(F)	I	R
1	1	120660-03200	VALVE,OIL STOP	1	1						
2	1	120662-07210	LABEL, CE MARK MED	1	1						
3	1	720662-77500	BOX ASSY,SOLAS SWITC	1	1						
4	2	120662-07260	LABEL,CAUTION	1	1						
5	2	120662-77500	HARNESS,ADAPTER	1	1						
6	2	120662-77530	BRACKET,SWITCH BOX	1	1						
8	2	119175-91510	TURN OVER SWITCH	1	1						

N:Old $\xleftrightarrow[\text{No}]{\text{Yes}}$ New, Q:Old $\xleftrightarrow[\text{Yes}]{\text{No}}$ New, R:Old $\xleftrightarrow[\text{Yes}]{\text{Yes}}$ New, S:Old $\xleftrightarrow[\text{No}]{\text{No}}$ New, W:Add, Z:Discontinued, F:Interchangeable by set, K:Q'ty Change

(C)Copyrights YANMAR CO.,LTD.

Fig.52. VDO GAUGE(OPTION)

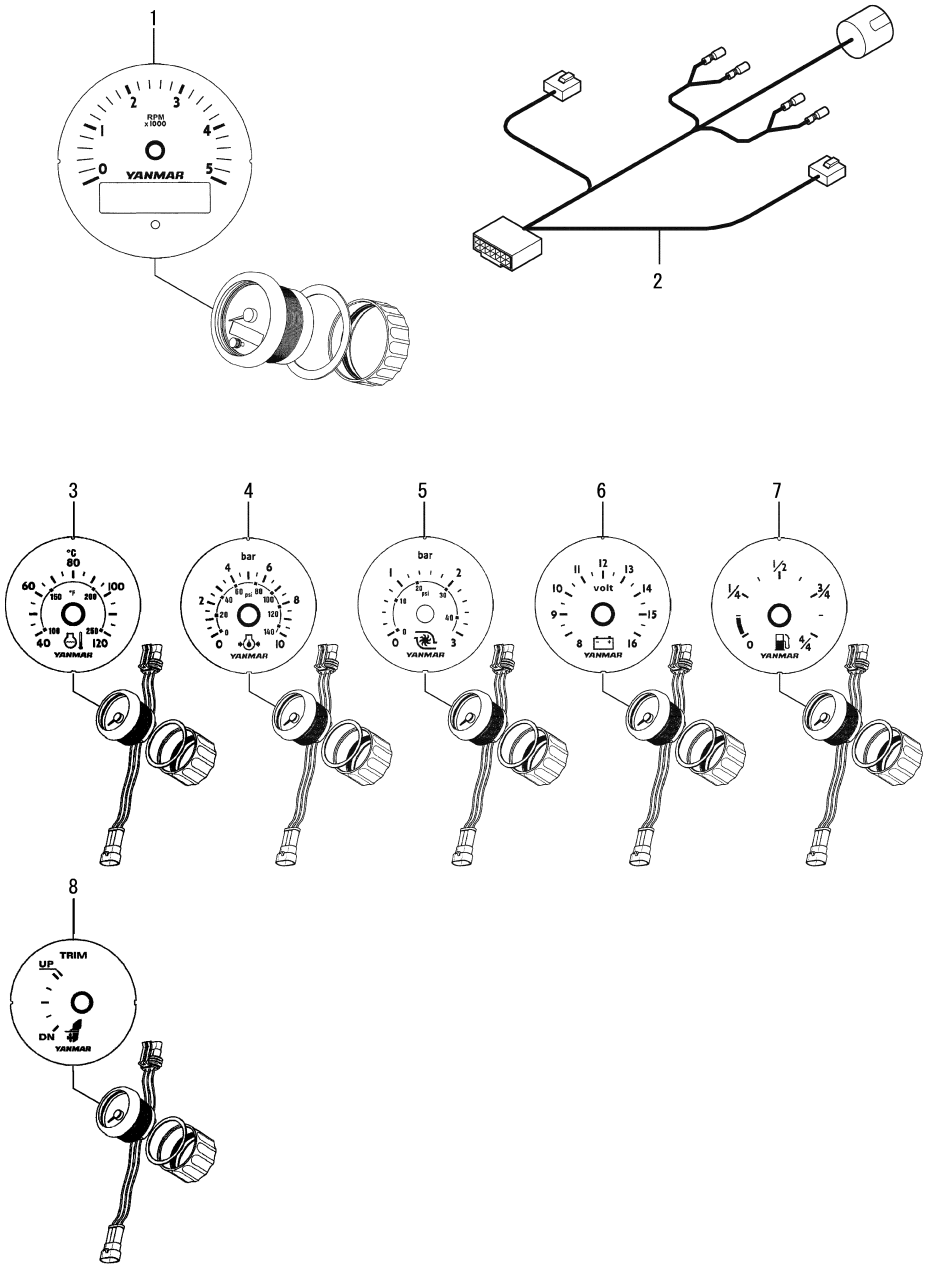

52. VDO GAUGE(OPTION)

(A)=6BY3-220
(B)=6BY3-260
(C)=6BY3-220Z
(D)=6BY3-260Z
(E)=
(F)=

REF.	LEV.	PARTS NO.	DESCRIPTION	Q'TY (A)	(B)	(C)	(D)	(E)	(F)	I	R
1	1	120650-91900	TACHOMETER,(V 5000	1	1	1	1				
2	1	120650-91960	HARNESS,V TACHO	1	1	1	1				
3	1	120650-91910	GAUGE,(V WATER TEMP	1	1	1	1				
4	1	120650-91920	GAUGE,(V OIL PRESS	1	1	1	1				
5	1	120650-91930	GAUGE,(V BOOST	1	1	1	1				
6	1	120650-91940	GAUGE,(V VOLT 12	1	1	1	1				
7	1	120650-91950	GAUGE,(V FUEL	1	1	1	1				
8	1	120650-91970	GAUGE, V TRIM	1	1	1	1				

N:Old $\frac{\text{Yes}}{\text{No}}$ New, Q:Old $\frac{\text{No}}{\text{Yes}}$ New, R:Old $\frac{\text{Yes}}{\text{Yes}}$ New, S:Old $\frac{\text{No}}{\text{No}}$ New, W:Add, Z:Discontinued, F:Interchangeable by set, K:Q'ty Change

(C)Copyrights YANMAR CO.,LTD.

Fig.53. TOOL

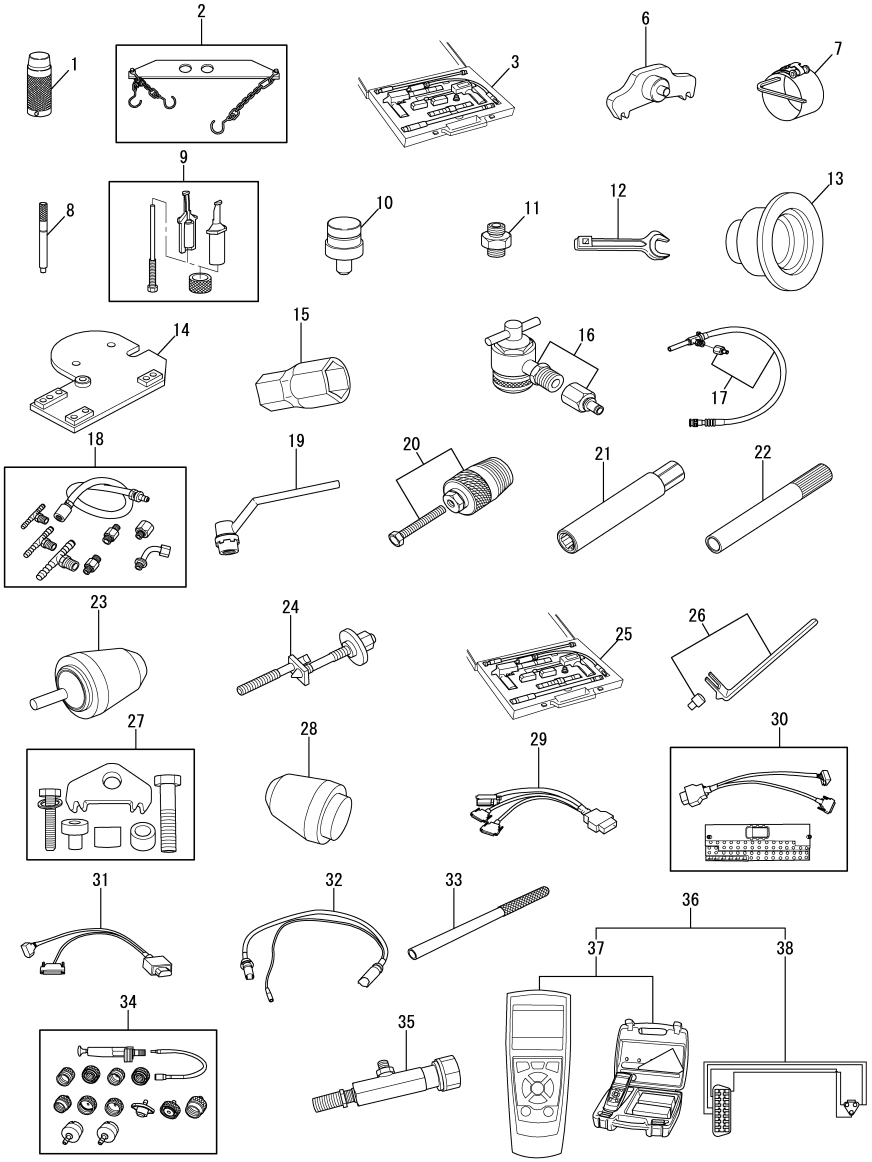

Remarks
(1)Test probe For compression recorde recorder.
Not illustrated.
(2)Sleeve for valve stem installation
Not illustrated.

53. TOOL

(A)=6BY3-220
(B)=6BY3-260
(C)=6BY3-220Z
(D)=6BY3-260Z
(E)=
(F)=

REF.	LEV.	PARTS NO.	DESCRIPTION	Q'TY (A)	(B)	(C)	(D)	(E)	(F)	I	R
1	1	165001-84870	CONNECTOR	1	1	1	1				
2	1	165001-84880	HEBER	1	1	1	1				
3	1	165001-84890	FOR COMPRESSION	1	1	1	1				
4	1	165001-84900	PROBE	1	1	1	1				1
5	1	165001-84910	SLEEVE	1	1	1	1				2
6	1	165001-84920	BRACKET	1	1	1	1				
7	1	165001-84930	P/RING CCCOMPRESSOR	1	1	1	1				
8	1	165001-84940	DORN	1	1	1	1				
9	1	165001-84950	EXTRACTOR	1	1	1	1				
10	1	165001-84960	DORN	1	1	1	1				
11	1	165001-84970	ADAPTER	1	1	1	1				
12	1	165001-84980	OPEN-ENDED WRENCH	1	1	1	1				
13	1	165001-84990	BUSH	1	1	1	1				
14	1	165001-85000	PLATE	1	1	1	1				
15	1	165001-85010	SOCKET WRENCH	1	1	1	1				
16	1	165001-85020	ADAPTER	1	1	1	1				
17	1	165001-85030	ADAPTER	1	1	1	1				
18	1	165001-85040	ADAPTER	1	1	1	1				
19	1	165001-85050	BRACKET	1	1	1	1				
20	1	165001-85060	EXTRACTOR	1	1	1	1				
21	1	165001-85070	TOOLS	1	1	1	1				
22	1	165001-85080	BUSH	1	1	1	1				
23	1	165001-85090	BUSH	1	1	1	1				
24	1	165001-85100	FIXTURE	1	1	1	1				
25	1	165001-85110	PROBE	1	1	1	1				
26	1	165001-85120	LEVER	1	1	1	1				
27	1	165001-85130	BRACKET	1	1	1	1				
28	1	165001-85140	BUSH	1	1	1	1				
29	1	165001-85150	ADAPTER LEAD	1	1	1	1				
30	1	165001-85160	ADAPTER LEAD	1	1	1	1				
31	1	165001-85170	ADAPTER LEAD	1	1	1	1				
32	1	165001-85180	ADAPTER LEAD	1	1	1	1				
33	1	165001-85190	ROD	1	1	1	1				
34	1	165001-85200	TESTER	1	1	1	1				
35	1	165001-85210	ADAPTER	1	1	1	1				
36	1	120650-90800	OBD TOOL CMP	1	1	1	1				
37	2	120650-90810	OBD DIAGNOSTIC TOOL	1	1	1	1				
38	2	120650-90820	ADAPTER CABLE(OBD	1	1	1	1				

N:Old $\xleftrightarrow[\text{No}]{\text{Yes}}$ New, Q:Old $\xleftrightarrow[\text{Yes}]{\text{No}}$ New, R:Old $\xleftrightarrow[\text{Yes}]{\text{Yes}}$ New, S:Old $\xleftrightarrow[\text{No}]{\text{No}}$ New, W:Add, Z:Discontinued, F:Interchangeable by set, K:Q'ty Change

(C)Copyrights YANMAR CO.,LTD.

Part Number Index

All parts are stipulated in the order of part numbers.
(Depending on the area in which the part is used.)
This index will display the location of the part according to each part number.

MODEL : 6BY3-220(Z)/260(Z)
PC NO : 0CR10-G85600

PARTS No. INDEX

PARTS No.	Fig.	Ref.No.
119172-48010	33	18
	34	14
119175-49550	13	6
	33	19
		24
119175-91510	51	8
119775-48640	37	20
119778-08350	3	15
119778-85500	15	8
119779-49050	37	21
119779-49190	32	4
119779-49200	32	5
119779-49210	32	6
119779-49550	13	8
119779-49900	32	10
120130-39990	23	2
120640-00010	19	1
120640-00020	19	2
120640-00040	11	13
120640-00100	3	6
120640-00130	25	14
120640-00140	25	12
120640-00150	38	1
120640-00170	49	5
120640-00180	49	6
120640-00190	4	7
120640-00200	38	23
	39	24
	48	4
	49	9
	50	1
120640-00220	3	10
120640-00240	15	1
120640-00290	24	2
120640-00300	38	14
120640-00320	11	38
	20	17
120640-00330	20	14
	47	3
120640-00390	33	1
120640-00450	25	13
120640-01020	20	7
	24	8
	27	21
	38	16
120640-01030	11	32
120640-01050	25	7
	37	14
120640-01210	24	10
	31	28

PARTS No.	Fig.	Ref.No.
120640-01230	4	6
	39	5
	50	2
120640-01240	38	11
120640-01250	34	2
120640-01260	11	17
	34	3
	38	8
120640-01270	33	11
		28
	34	4
	35	7
120640-01300	39	13
	50	3
120640-01310	39	19
120640-01400	39	20
120640-01410	24	12
	31	33
120640-01420	38	13
120640-01430	24	3
	39	7
120640-01450	40	5
	49	19
120640-01460	3	11
	11	33
		36
	29	3
120640-01470	39	4
	49	4
120640-01490	49	16
120640-01500	11	25
120640-01510	20	4
	24	15
	31	19
120640-01520	29	14
	37	15
	38	19
120640-01540	15	10
	25	3
		10
120640-01550	28	17
120640-01560	15	9
	47	5
120640-01570	38	5
120640-01580	24	6
120640-01590	11	24
	25	8
120640-01830	38	22
	39	23
120640-01850	20	13

PARTS No.	Fig.	Ref.No.
120640-01860	26	20
120640-01870	26	16
	38	3
120640-01880	5	5
	15	7
	29	15
120640-01900	3	14
120640-01910	3	13
	29	8
120640-01920	5	4
	26	22
120640-01930	38	2
120640-01940	3	2
	29	10
120640-01960	29	5
120640-01970	5	2
	42	4
120640-01980	49	2
120640-01990	26	17
120640-02000	5	6
120640-02010	3	3
120640-02040	3	5
120640-02050	3	4
120640-02080	4	30
	11	37
	20	3
	31	3
	39	12
	48	3
120640-02130	3	18
	11	29
120640-02140	29	7
120640-02150	26	19
120640-02160	26	21
120640-02210	15	5
120640-02220	11	23
	25	9
	38	4
		21
	39	22
	40	4
	49	8
		17
120640-02230	24	14
	25	4
		11
	31	1
	38	18
120640-02250	3	19
120640-09130	27	22

PARTS No.	Fig.	Ref.No.
120640-09130	33	2
120650-01760	3	16
120650-07030	6	1
120650-07040	6	2
120650-07050	6	3
120650-07060	6	4
120650-07070	6	5
120650-07080	6	6
120650-07090	6	7
120650-07100	6	8
120650-07130	20	12
120650-07161	6	11
120650-07171	6	12
120650-07250	46	7
120650-07260	46	8
120650-07270	46	9
120650-07350	20	28
120650-08401	5	7
120650-08410	5	8
120650-11440	29	2
120650-11660	20	6
120650-11670	20	8
120650-12560	12	2
120650-12580	12	4
120650-13070	11	2
		16
120650-13090	11	19
120650-13130	11	14
120650-13140	11	15
120650-13170	11	12
120650-13390	34	5
120650-13420	33	12
		29
	34	7
	35	8
120650-13430	33	13
	34	8
120650-13450	33	3
		25
	34	10
	35	1
120650-13490	34	9
120650-13520	33	5
	34	11
120650-13601	13	1
120650-13610	13	2
120650-13660	13	3
120650-13670	13	4
120650-13680	13	5
120650-13750	34	12

MODEL : 6BY3-220(Z)/260(Z)
PC NO : 0CR10-G85600

PARTS No. INDEX

PARTS No.	Fig.	Ref.No.
120650-13760	34	13
120650-13870	33	26
120650-13901	33	10
120650-13911	33	15
120650-13921	35	5
120650-13930	33	27
	35	6
120650-13940	33	30
	35	9
120650-13951	35	12
120650-13980	35	16
120650-13990	35	17
120650-17170	20	18
120650-17200	20	19
120650-17210	20	21
120650-17220	20	20
120650-17310	41	25
120650-17320	20	24
120650-17370	29	13
120650-17380	20	9
120650-17390	20	15
120650-17410	20	16
120650-18430	26	4
120650-18440	26	5
120650-18450	26	6
120650-18470	26	7
120650-18480	26	8
	30	8
120650-18490	26	9
	30	18
120650-18500	26	12
	30	11
120650-18510	26	13
120650-18520	26	14
120650-18530	26	10
	30	19
120650-18830	25	6
120650-18850	25	1
120650-18900	11	5
120650-18910	25	5
120650-33300	37	12
120650-34850	4	22
120650-34890	4	31
120650-34910	4	26
120650-39190	39	11
120650-39250	24	7
120650-39270	24	4
120650-39290	24	11
120650-42300	28	1
120650-42310	28	3

PARTS No.	Fig.	Ref.No.
120650-42360	28	18
120650-42620	37	16
120650-42630	32	3
120650-42650	37	23
120650-44030	30	3
120650-44040	30	4
120650-44050	30	7
120650-44070	30	6
120650-44090	30	9
120650-44150	29	1
120650-44180	29	6
120650-44220	29	4
120650-44230	29	12
120650-44270	20	2
120650-44540	11	27
120650-44560	11	21
120650-44570	11	22
120650-44580	11	26
120650-44590	11	28
120650-49200	31	4
120650-49260	31	2
120650-49310	27	24
		34
120650-49350	31	23
120650-49380	27	16
120650-49390	27	35
120650-49400	27	17
120650-49440	31	30
120650-49450	31	25
120650-49460	31	27
120650-49520	37	3
120650-49550	37	4
120650-49580	37	8
120650-49590	37	9
120650-49610	11	20
	30	12
	37	2
120650-49650	31	9
120650-49710	31	8
		14
		16
		18
	32	7
	37	5
		6
		11
		22
120650-49720	11	6
	32	9
	33	20

PARTS No.	Fig.	Ref.No.
120650-49720	33	33
	34	15
	35	18
	37	7
		24
120650-49750	33	21
120650-49811	27	25
120650-49821	27	30
120650-49830	27	26
		31
120650-49851	27	23
120650-49861	27	29
120650-51500	40	1
120650-51620	4	5
120650-51630	40	2
120650-55010	43	2
120650-55020	43	3
120650-55050	43	4
120650-55060	43	5
120650-55070	43	6
120650-55220	39	1
120650-55320	39	8
		26
120650-55540	40	3
120650-55660	39	18
120650-55710	39	15
120650-55720	39	3
120650-55730	39	2
120650-55830	39	29
120650-55840	39	9
		25
120650-55850	31	29
	39	31
120650-57010	37	13
120650-57410	38	12
120650-57440	38	15
120650-75250	49	27
120650-75320	49	23
120650-75350	49	18
120650-75360	49	10
120650-75380	49	26
120650-75450	49	7
	50	4
120650-75500	46	2
120650-75510	46	3
120650-75520	46	4
120650-75530	46	5
120650-75540	46	6
120650-75700	49	11
120650-75810	49	20

PARTS No.	Fig.	Ref.No.
120650-75820	49	21
120650-75910	50	5
120650-75920	50	7
120650-75930	49	24
120650-75940	49	25
120650-77530	47	6
120650-78051	46	1
120650-78260	48	5
120650-78300	50	12
120650-85370	38	9
120650-85390	38	17
120650-85410	24	13
	38	24
120650-85430	38	20
	39	21
120650-85450	38	25
120650-90800	53	36
120650-90810	53	37
120650-90820	53	38
120650-91900	52	1
120650-91910	52	3
120650-91920	52	4
120650-91930	52	5
120650-91940	52	6
120650-91950	52	7
120650-91960	52	2
120650-91970	52	8
120651-07120	6	9
120651-13600	13	7
120651-13640	35	2
120651-39350	24	9
120651-44190	29	11
120651-44350	31	15
120651-44500	30	13
120651-44510	30	14
120651-44520	30	15
120651-49420	31	31
120651-49710	32	8
120651-55010	42	1
120651-55020	42	2
120651-55050	42	3
120651-55310	39	6
120651-55340	39	10
120651-55440	43	1
120651-75290	49	3
120651-75410	49	1
120651-75830	49	22
120651-75871	48	1
120652-13400	34	1
120652-13410	34	6

MODEL : 6BY3-220(Z)/260(Z)
PC NO : 0CR10-G85600

PARTS No. INDEX

PARTS No.	Fig.	Ref.No.
120652-21603	15	11
120653-01710	3	17
120660-01800	3	1
120660-01900	3	7
120660-03200	51	1
120660-08100	5	1
120660-08110	5	3
120660-11411	11	30
120660-11430	11	31
120660-12510	11	7
120660-12550	12	1
120660-12570	12	3
120660-12590	12	5
120660-13040	11	11
120660-13160	11	10
120660-13470	33	14
120660-13510	33	4
120660-13810	33	6
120660-13820	33	7
120660-13881	33	8
120660-13891	33	9
120660-17290	10	10
120660-17360	20	10
120660-18050	11	4
120660-18140	11	8
120660-18200	11	3
120660-18210	11	9
120660-18420	26	3
120660-18460	26	15
120660-18820	25	2
120660-21420	15	4
120660-34700	4	20
120660-34800	4	13
120660-34810	4	21
120660-34840	4	10
120660-35100	47	7
120660-39310	24	5
120660-44020	30	5
120660-44210	29	9
120660-44400	26	18
120660-44530	31	17
120660-49430	31	26
120660-49540	37	1
120660-55290	39	17
120660-55300	39	14
120660-55630	39	30
120660-55810	39	27
120660-55820	39	28
120660-78002	47	1
120660-78211	47	2

PARTS No.	Fig.	Ref.No.
120660-78240	48	2
120660-78600	47	4
120660-85320	38	6
120660-85330	38	10
120660-85360	38	7
120661-01710	3	12
120661-11460	11	34
120661-17000	20	1
120661-17010	20	11
120661-17020	20	5
120661-18010	11	1
120661-18300	11	35
120661-18400	26	1
120661-18410	26	2
120661-21400	15	2
120661-21410	15	3
120661-21470	15	6
120661-39200	24	16
120661-39350	24	1
120661-44000	30	1
120661-44010	30	2
120661-44540	30	10
120661-44550	30	17
120661-44560	30	16
120661-49100	31	10
120661-49250	31	20
120661-49330	31	24
120661-49560	37	10
120661-55330	39	16
120661-81050	32	1
120662-07210	51	2
120662-07260	51	4
120662-13870	35	3
120662-13890	35	4
120662-13950	35	13
120662-13960	35	14
120662-13970	35	15
120662-77500	51	5
120662-77530	51	6
121750-59890	50	11
124413-39100	23	1
128397-44500	29	16
128397-44510	29	17
128990-77430	20	23
128990-77610	20	22
129270-44501	29	20
129670-44570	29	18
129670-49500	27	28
		33
129672-07100	6	10

PARTS No.	Fig.	Ref.No.
165000-66930	15	14
165000-67110	17	8
	18	11
165000-67180	45	4
165000-67230	2	11
165000-67240	27	8
165000-67280	21	2
165000-67290	1	8
165000-67330	2	12
165000-67400	1	7
165000-67410	1	14
165000-67430	17	3
165000-67470	1	9
165000-67550	44	3
165000-67720	1	11
165000-67730	1	3
	17	5
165000-67740	1	12
165000-67750	1	6
165000-67760	1	4
	18	7
165000-67770	1	1
165000-67780	1	5
165000-67790	1	2
165000-67810	21	1
165000-67880	1	10
165000-67960	27	10
165000-67990	8	4
165000-68010	9	6
165000-68050	8	7
165000-68060	8	8
165000-68070	8	9
165000-68150	9	1
165000-68160	9	10
165000-68170	9	11
165000-68180	9	9
165000-68230	9	8
165000-68240	9	2
165000-68280	8	2
165000-68310	4	1
165000-68320	21	10
165000-68390	2	2
165000-68400	2	3
165000-68410	2	5
165000-68420	2	4
165000-68440	15	13
165000-68460	14	5 AY
165000-68470	14	5 AG
165000-68480	14	5 AW
165000-68490	14	5 BY

PARTS No.	Fig.	Ref.No.
165000-68500	14	5 BG
165000-68510	14	5 BW
165000-68520	14	5 CY
165000-68530	14	5 CG
165000-68540	14	5 CW
165000-68550	14	4 AY
165000-68560	14	4 AG
165000-68570	14	4 AW
165000-68580	14	4 BY
165000-68590	14	4 BG
165000-68600	14	4 BW
165000-68610	14	4 CY
165000-68620	14	4 CG
165000-68630	14	4 CW
165000-68640	14	2 AY
165000-68650	14	2 AG
165000-68660	14	2 AW
165000-68670	14	2 BY
165000-68680	14	2 BG
165000-68690	14	2 BW
165000-68700	14	2 CY
165000-68710	14	2 CG
165000-68720	14	2 CW
165000-68730	14	3 AY
165000-68740	14	3 AG
165000-68750	14	3 AW
165000-68760	14	3 BY
165000-68770	14	3 BG
165000-68780	14	3 BW
165000-68790	14	3 CY
165000-68800	14	3 CG
165000-68810	14	3 CW
165000-68850	14	1
165000-68870	17	10
165000-68900	17	9
165000-68930	16	2
165000-69060	16	1
165000-69070	16	10
165000-69080	16	11
165000-69090	16	12
165000-69100	16	9
165000-69120	2	10
165000-69130	2	8
165000-69170	2	13
165000-69190	18	8
165000-69200	18	6
165000-69240	18	4
165000-69250	18	12
165000-69260	18	13
165000-69270	18	5

MODEL : 6BY3-220(Z)/260(Z)
PC NO : 0CR10-G85600

PARTS No. INDEX

PARTS No.	Fig.	Ref.No.
165000-69280	7	10
165000-69290	7	9
165000-69300	7	15
165000-69310	7	14
165000-69320	7	11
165000-69330	7	13
165000-69350	7	12
165000-69370	21	4
165000-69390	21	5
165000-69400	21	7
165000-69410	21	3
165000-69430	21	9
165000-69480	1	13
165000-69560	22	7
165000-69570	22	4
165000-69580	22	5
165000-69590	22	2
165000-69600	22	9
165000-69610	22	10
165000-69620	22	11
165000-69630	22	3
165000-69650	27	5
165000-69660	27	6
165000-69670	27	7
165000-69690	2	7
	27	3
165000-69780	27	14
165000-69800	10	4
165000-69810	10	3
165000-69820	10	6
165000-69830	10	5
165000-69840	10	7
165000-69850	10	9
165000-69860	10	2
165000-69870	10	1
165000-69910	9	12
165000-70000	8	1
165000-70070	45	6
165000-70150	41	24
165000-70160	41	5
165000-70180	41	21
165000-70200	41	20
165000-70210	18	3
165000-70220	17	6
165000-70230	17	4
165000-70240	18	2
165000-70250	17	7
	18	10
165000-70270	41	11
165000-70290	41	9

PARTS No.	Fig.	Ref.No.
165000-70300	41	19
165000-70390	41	3
165000-70410	41	17
165000-70420	41	12
165000-70430	41	10
165000-70560	41	8
165000-70640	41	13
165000-70660	8	6
165000-70680	15	17
165000-70700	9	14
165000-70730	9	15
165000-71020	9	13
165000-93230	4	18
165000-93240	4	19
165000-93260	4	2
165000-93270	4	8
165000-93300	21	8
165000-93310	15	16
165000-93350	41	16
165001-22380	27	2
165001-25170	4	17
165001-25180	45	1
165001-35540	41	7
165001-35650	41	2
165001-35670	45	3
165001-35680	8	3
165001-35730	27	13
165001-35740	22	6
165001-35760	44	1
165001-35770	44	2
165001-35780	9	3
165001-35790	10	8
165001-35800	27	9
165001-35810	4	15
165001-35820	4	16
165001-35830	18	9
165001-35840	41	4
165001-35850	2	9
165001-35870	27	1
165001-35880	41	1
165001-35920	7	1
165001-35940	41	14
165001-35950	41	15
165001-35970	7	8
165001-35980	4	14
165001-35990	17	2
165001-36000	17	11
165001-39220	9	4
165001-39240	7	4
165001-43540	27	11

PARTS No.	Fig.	Ref.No.
165001-44420	2	6
165001-44430	2	1
165001-44440	27	4
165001-44450	27	12
165001-46270	41	18
165001-46290	22	8
165001-59970	7	6
165001-59980	27	15
165001-59990	18	1
165001-60000	17	1
165001-60010	41	6
165001-60020	45	2
165001-66850	15	15
165001-66860	45	5
165001-66870	9	5
	15	12
165001-66880	7	5
165001-66890	41	23
165001-66900	7	2
165001-66910	8	5
165001-66920	9	7
165001-66930	41	22
165001-71670	7	7
165001-71680	16	3
165001-71690	16	4
165001-71700	16	5
165001-71710	16	6
165001-71720	16	7
165001-71730	16	8
165001-71750	15	18
165001-84870	53	1
165001-84880	53	2
165001-84890	53	3
165001-84900	53	4
165001-84910	53	5
165001-84920	53	6
165001-84930	53	7
165001-84940	53	8
165001-84950	53	9
165001-84960	53	10
165001-84970	53	11
165001-84980	53	12
165001-84990	53	13
165001-85000	53	14
165001-85010	53	15
165001-85020	53	16
165001-85030	53	17
165001-85040	53	18
165001-85050	53	19
165001-85060	53	20

PARTS No.	Fig.	Ref.No.
165001-85070	53	21
165001-85080	53	22
165001-85090	53	23
165001-85100	53	24
165001-85110	53	25
165001-85120	53	26
165001-85130	53	27
165001-85140	53	28
165001-85150	53	29
165001-85160	53	30
165001-85170	53	31
165001-85180	53	32
165001-85190	53	33
165001-85200	53	34
165001-85210	53	35
165001-85220	22	1
720662-77500	51	3
977780-01211	36	1
977780-03000	36	9
X0044021509	36	7
X0318101004	36	2
X158606410X	36	3
X179100022X	36	5
X179100100X	36	6
X199906101X	36	8
X8636015001	36	4